REV.	LERA LESLIE E. ROBERTSON ASSOCIATES, RLLP CONSULTING STRUCTURAL ENGINEERS	P	DRAWING NO.
		DRAFT	
		DESIGN	
		CHECK	

WTC

DRAWING

BOOK

10

Box 5

Book 10

PROJECT THE WORLD TRADE CENTER | TITLE DRAWING BOOK 10 | WTCI-32-LERA | DATE 5/18/73

REVISIONS

10-JK0-	0	5/18/73	10- J1-	50	11/ 8/67	10- K1-204	6/ 7/68	10- K1-254	3/21/69	10-JK2-	36	4/ 4/69
10-JK0-	0.1	5/18/73	10- J1-	51	11/ 8/67	10- K1-205	4/ 7/72	10- K1-255	6/11/68	10-JK2-	37	4/26/68
10-JK1-	0	5/ 1/69	10- J1-	52	5/ 1/68	10- K1-206	1/13/69	10- K1-256	9/ 4/68	10-JK2-	38	1/ 8/69
10- J1-	1	11/ 8/67	10- J1-	53	1/ 5/68	10- K1-207	11/27/72	10- K1-257	6/11/68	10-JK2-	38A	1/ 8/69
10- J1-	2	4/ 5/68	10- J1-	54	11/ 8/67	10- K1-208	10/14/69	10- K1-258	9/ 4/68	10-JK2-	39	6/ 7/68
10- J1-	3	5/ 1/68	10- J1-	55	5/ 1/68	10- K1-209	11/ 8/67	10- K1-259	6/11/68	10-JK2-	40	6/ 7/68
10- J1-	4	6/ 7/68	10- J1-	56	11/ 8/67	10- K1-210	1/13/69	10- K1-260	6/11/68	10-JK2-	41	11/ 5/68
10- J1-	5	4/ 5/68	10- J1-	57	1/13/69	10- K1-211	11/27/72	10- K1-261	9/ 4/68	10-JK2-	42	4/18/69
10- J1-	6	2/ 9/68	10- J1-	58	1/13/69	10- K1-212	10/14/69	10- K1-262	6/11/68	10-JK2-	43	8/10/70
10- J1-	7	6/ 7/68	10- J1-	59	11/ 8/67	10- K1-213	2/ 4/69	10- K1-264	9/ 4/68	10-JK3-	2	9/ 4/68
10- J1-	8	9/ 4/68	10- J1-	60	11/ 8/67	10- K1-214	1/13/69	10- K1-265	6/11/68	10-JK3-	2A	9/ 4/68
10- J1-	9	11/ 5/68	10- J1-	61	11/ 8/67	10- K1-215	11/27/72	10- K1-266	9/ 4/68	10-JK3-	2B	6/ 7/68
10- J1-	10	9/20/68	10- J1-	62	1/13/69	10- K1-216	10/14/69	10- K1-267	9/ 4/68	10-JK3-	2C	9/ 4/68
10- J1-	11	9/20/68	10- J1-	63	1/13/69	10- K1-217	2/ 4/69	10- K1-268	6/11/68	10-JK3-	2D	8/ 9/68
10- J1-	12	6/17/68	10- J1-	64	11/ 8/67	10- K1-218	9/20/68	10- K1-269	6/ 7/68	10-JK3-	2E	4/17/69
10- J1-	13	6/17/68	10- J1-	65	11/ 8/67	10- K1-219	1/13/69	10- K1-270	6/28/68	10-JK3-	2F	4/17/69
10- J1-	14	11/ 5/68	10- J1-	66	1/13/69	10- K1-220	11/ 5/68	10- K1-271	6/28/68	10-JK3-	3	3/19/69
10- J1-	15	5/ 1/68	10- J1-	67	1/13/69	10- K1-221	11/27/72	10- K1-272	6/28/68	10-JK3-	3A	3/19/69
10- J1-	16	5/ 1/68	10- J1-	68	11/ 8/67	10- K1-222	11/27/72	10- K1-274	6/28/68	10-JK3-	3B	4/14/70
10- J1-	17	4/18/69	10- J1-	69	11/ 8/67	10- K1-223	2/ 4/69	10- K1-275	6/28/68	10-JK3-	3C	3/21/69
10- J1-	18	6/17/68	10- J1-	70	1/13/69	10- K1-225	4/17/69	10- K1-276	6/28/68	10-JK3-	4	11/ 5/68
10- J1-	19	4/ 4/69	10- J1-	71	1/13/69	10- K1-226	11/27/69	10- K1-276A	12/17/68	10-JK3-	5	11/ 5/68
10- J1-	20	6/ 7/68	10- J1-	72	11/ 8/67	10- K1-227	11/27/69	10- K1-278	10/15/68	10-JK3-	6	11/ 5/68
10- J1-	21	5/ 1/68	10- J1-	73	11/ 8/67	10- K1-228	3/21/69	10- K1-279	4/18/69	10-JK3-	7	11/ 5/68
10- J1-	22	6/17/68	10- J1-	74	1/13/69	10- K1-229	8/10/70	10- K1-299	11/27/72	10-JK3-	8	11/ 5/68
10- J1-	23	6/17/68	10- J1-	75	1/13/69	10- K1-230	11/27/69	10-JK2-	2	3/ 1/69	10-JK3-	9	11/ 5/68
10- J1-	24	6/17/68	10- J1-	76	11/ 8/67	10- K1-231	11/27/69	10-JK2-	3	10/20/67	10-JK3-	10	11/ 5/68
10- J1-	25	5/ 1/68	10- J1-	77	11/ 8/67	10- K1-232	3/21/69	10-JK2-	4	12/23/71	10-JK4-	3	1/20/69
10- J1-	26	5/ 1/68	10- J1-	78	11/ 8/67	10- K1-233	4/30/69	10-JK2-	5	11/ 8/67	10-JK4-	4	1/20/69
10- J1-	27	6/17/68	10- J1-	79	5/ 1/68	10- K1-234	11/27/72	10-JK2-	7	6/17/68	10-JK4-	4B	9/ 4/68
10- J1-	28	6/17/68	10- J1-	80	5/ 1/68	10- K1-235	11/27/72	10-JK2-	8	10/20/67	10-JK4-	5	12/ 3/68
10- J1-	29	6/17/68	10- J1-	81	5/ 1/68	10- K1-236	11/27/72	10-JK2-	9	11/ 8/67	10-JK4-	6	12/ 3/68
10- J1-	31	2/ 9/68	10- J1-	83	6/28/68	10- K1-237	4/17/69	10-JK2-	10	11/ 8/67	10-JK4-	7	12/ 3/68
10- J1-	32	6/17/68	10- J1-	84	10/15/68	10- K1-238	11/27/72	10-JK2-	12	10/20/67	10-JK4-	8	12/ 3/68
10- J1-	33	6/17/68	10- J1-	85	6/ 7/68	10- K1-239	11/27/72	10-JK2-	13	3/13/68	10-JK4-	9	1/20/69
10- J1-	35	5/ 1/68	10- J1-	86	6/28/68	10- K1-240	12/17/68	10-JK2-	14	3/13/68	10-JK4-	10	11/24/67
10- J1-	36	9/ 4/68	10- J1-	87	10/15/68	10- K1-241	11/27/72	10-JK2-	15	3/13/68	10-JK4-	10A	6/ 7/68
10- J1-	37	2/ 9/68	10- J1-	88	10/15/68	10- K1-242	11/27/72	10-JK2-	16	6/ 7/68	10-JK4-	10B	2/ 4/69
10- J1-	38	11/ 5/68	10- J1-	89	5/ 1/68	10- K1-243	12/17/68	10-JK2-	17	3/17/69	10-JK4-	10C	3/12/69
10- J1-	39	6/17/68	10- J1-	90	10/15/68	10- K1-244	11/27/72	10-JK2-	30	10/15/68	10-JK4-	10D	3/12/69
10- J1-	40	6/17/68	10- J1-	91	6/ 7/68	10- K1-245	11/27/72	10-JK2-	31	1/ 5/68	10-JK4-	10E	6/ 7/68
10- J1-	41	2/ 9/68	10- J1-	92	6/28/68	10- K1-246	11/27/72	10-JK2-	31A	11/ 5/68	10-JK4-	10F	9/ 4/68
10- J1-	42	6/ 7/68	10- J1-	93	6/ 7/68	10- K1-246A	6/13/69	10-JK2-	31B	2/ 4/69	10-JK4-	10G	3/30/70
10- J1-	43	1/ 8/69	10- J1-	94	6/ 7/68	10- K1-247	12/17/68	10-JK2-	32	4/ 4/69			
10- J1-	44	11/ 8/67	10- J1-	95	6/28/68	10- K1-248	12/17/68	10-JK2-	33	1/ 5/68			
10- J1-	45	5/ 1/68	10- J1-	97	5/ 1/68	10- K1-249	11/27/72	10-JK2-	34	11/ 5/68			
10- J1-	46	11/ 8/67	10- J1-	99	9/13/68	10- K1-250	6/13/69	10-JK2-	35	6/ 7/68			
10- J1-	47	11/ 8/67	10- K1-	201	1/13/69	10- K1-251	12/17/68	10-JK2-	35A	12/ 3/68			
10- J1-	48	11/ 8/67	10- K1-	202	11/ 8/67	10- K1-252	6/28/68	10-JK2-	35B	5/29/69			
10- J1-	49	11/ 8/67	10- K1-	203	1/13/69	10- K1-253	11/27/72	10-JK2-	35C	9/ 4/68			

LICENSED PROFESSIONAL ENGINEER LESLIE E. ROHLFSEN No. 34360 STATE OF NEW YORK

10-JK0- 0

SKILLING, HELLE, CHRISTIANSEN, ROBERTSON — Structural & Civil Engineers

PROJECT	TITLE	DATE
THE WORLD TRADE CENTER	DRAWING BOOK 10	10/ 6/72

SIONS

PRINTED
5/18/73

10-JK4- 10F	4/18/69
10-JK4- 11A	5/ 1/68
10-JK4- 12	6/ 7/68
10-JK4- 15	2/ 4/69
10-JK4- 16	3/12/69
10-JK4- 29	6/11/68
10-JK4- 30	12/17/68

10-JK5-2	12/23/71

SKILLING - HELLE - CHRISTIANSEN - ROBERTSON — Structural & Civil Engineers

PROJECT	TITLE	DATE
THE WORLD TRADE CENTER	DRAWING INDEX	5/15/67

REVISIONS

5-26-67
10-20-67
1- 5-68
2- 9-68
3-13-68
4- 5-68
4-26-68
5- 1-68
6- 3-68
6- 7-68
6-11-68
6-28-68
8- 9-68
9-20-68
10-15-68
11- 5-68
12- 3-68
12-17-68
1- 3-69
1- 6-69
1-13-69
1-17-69
2- 3-69
2- 4-69
3- 1-69
3-
3-

DRAWING NO. BOOK 10	TITLE
10-JK1-0	Drawing Index
10-J1-1	Notes on Column, Base Plates & Shear Heads
10-J1-2 thru 29, 31, 32, 33, 35 thru 81, 83 thru 95, 97, 99	Column Schedule and Base Plates (Zone J)
10-K1-201 thru 223, 225 thru 262, 264 thru 272, 274 thru 276A, 278, 279	Column Schedule and Base Plates (Zone K)
10-JK2-2 thru 5	Typical Column Details
10-JK2-7 thru 10	Typical Column Details
10-JK2-12 thru 17	Typical Column Details
10-JK2-30 & 31A	Typical Detail of Temporary Column Cap for Construction Crane Support
10-JK2-31	Typical Detail of Column Sitting on Top of Girder
10-JK2-32	Detail of Column Cap over Columns K31-4, K35-3 & K37-3
10-JK2-33	Hanger Detail
10-JK2-34	Detail of Column J8-6
10-JK2-35	Column Details
10-JK2-35A, 35B, 35C, 36 thru 42	Column Splice Details
10-JK3-2	Typical Detail of Column Base Plate
10-JK3-2A	Detail of Column Base Plate J3-14
10-JK3-2B	Column Base Plate Detail at Truck Ramps
10-JK3-2C	Typical Column Base Plate Detail under Box Section Column
10-JK3-2D	Typical Detail of Column Base Plates (with ** as shown on plans)
10-JK3-2E	Detail of Column Base Plate M42-3
10-JK3-2F	Detail of Column Base M48-5
10-JK3-3, 3A, 3B & 3C	Column Base Plate Schedule at El. 310'
10-JK3-4 thru 10	Column Base Plate Detail at El. 310'
10-JK4-3	Typical Column Shear - Head Details at El. 264'
10-JK4-4	Typical Column Shear - Head Details at El. 264'
10-JK4-4B	Column Splice Detail
10-JK4-5	Column Shear - Head Detail - Type V, W, X
10-JK4-6	Column Shear - Head Detail - Type Y
10-JK4-7, 8 & 9	Shear Head Details
10-JK4-10	Detail of Column Bosom Plates - Types A, B, C, D, E, F, G
10-JK4-10A, 10B, 10C, 10D, 10E, 10F, 10G, 10H	Detail of Column Bosom Plates - Type H
10-JK4-11A, 12, 15, 16, 29 and 30	Detail of Column Bosom Plates - Type J

WORTHINGTON, SKILLING, HELLE & JACKSON — Civil & Structural Engineers

PROJECT THE WORLD TRADE CENTER | TITLE NOTES ON COLUMN, BASE PLATES & SHEAR HEADS | DATE 5-15-67

REVISIONS

5-26-67
10-20-67
11-8-67

NOTES:

A. Columns

1. Material for all columns shall be A-36 steel except as noted.

2. See 10-JK2 for location and detail of column splices.

B. Column Base-plates

1. Material for all base plates shall be A-36 steel except as noted

2. All thickness shown are finished thickness.

3. Provide 2-1"Φ 2'-0" 4" anchor bolts and proper nuts & washers per base ℞. See detail on 10-JK3-2.

C. Column Shear-Heads

1. Provide shear-head at each level where column supports flat-slab construction (see 10-JK4 for typical detail). Where steel or concrete beams frame to a column, no shear-head is required.

2. Material for shear-heads shall be F_Y=50KSI

D. Column Cap and Bearing Plates

1. All column cap and bearing plates to be 1-1/2" thick, overhang a min. of 1/2" to each side of the column to which they are connected to, except otherwise noted on JK2-30 and 31.

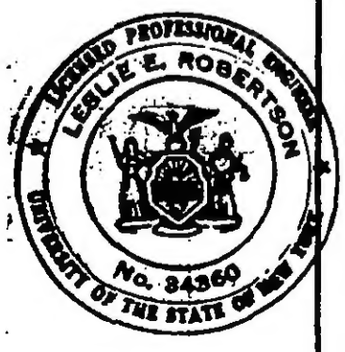

LICENSED PROFESSIONAL ENGINEER
LESLIE E. ROBERTSON
No. 34360
UNIVERSITY OF THE STATE OF NEW YORK

10-J1-1

WORTHINGTON, SKILLING, HELLE & JACKSON — Civil & Structural Engineers

PROJECT: THE WORLD TRADE CENTER | TITLE: COLUMN SCHEDULE | DATE: 5-15-67

REVISIONS
2-9-68
4-5-68

	J1-1	J1-2	J1-3	J1-4	J1-5	J1-6	J1-7
El. 332'							
El. 310'							
Street level							
El. 294'							
El. 284'	14 WF 61 (Fy=42)	14 WF 87 (Fy=50)	14 WF 87 (Fy=50)	14 WF 87 (Fy=50)	14 WF 87 (Fy=42)		
El. 274'							
El. 264'	14 WF 111 (Fy=50)	14 WF 150 (Fy=50)	14 WF 184 (Fy=50)	14 WF 184 (Fy=50)	14 WF 150 (Fy=50)	Truss JT-2 above See dwg. 11-J1-3	
El. 253	▲ 14 WF 111 (Fy=50)	▲ 14 WF 150 (Fy=50)	▲ 14 WF 184 (Fy=50)	▲ 14 WF 184 (Fy=50)	▲ 14 WF 150 (Fy=50)	14 WF 314 (Fy=50)	14 WF 95 (Fy=50)
Top of base Pl	El. 249'	El. 249'	El. 249'	El. 249'	El. 249'	El. 249'	El. 243'-6"
Base Plate	25 × 2 × 2'-2"	30 × 2 5/8 × 2'-8"	33 × 3 × 2'-11"	33 × 3 × 2'-11"	30 × 2 5/8 × 2'-8"	45 × 4 5/8 × 4'-0"	26 × 2 1/8 × 2'-3"

LICENSED PROFESSIONAL ENGINEER — LESLIE E. ROBERTSON — No. 34160 — STATE OF NEW YORK

* Provide proper splice pls., bolt holes & finished col. top for future columns. Use upper col. one size smaller except as shown.
▲ See detail on 10-JK4-3 and 4.
■ Splice 3" above slab. See note on 10-JK2-2.
● See detail on 10-JK2-30.

10-J1-2

WORTHINGTON, SKILLING, HELLE & JACKSON — Civil & Structural Engineers

PROJECT: THE WORLD TRADE CENTER | TITLE: COLUMN SCHEDULE | DATE: 5-15-67

REVISIONS
2-9-68
5-1-68

	J1-8			J1-11			
El. 332'							
El. 310'							
El. 294'							
El. 284'							
El. 274'							
El. 264'							
El. 253	14 WF 246 (Fy·50)			14 WF 95 (Fy·50)			
Top of base PL	El. 243'-6"			El. 241'			
Base Plate	42 × 4 5/8 × 3'-8"			27 × 2'-4 × 2'-3"			

* Provide proper splice pls., bolt holes & finished col. top for future columns. Use upper col. one size smaller except as shown.
▲ See detail on 10-JK4-3 and 4.
■ Splice 3" above slab. See note on 10-JK2-2.
● See detail on 10-JK2-30.

LICENSED PROFESSIONAL ENGINEER — LESLIE E. ROBERTSON — No. 34360 — UNIVERSITY OF THE STATE OF NEW YORK

10-J1-3

WORTHINGTON, SKILLING, HELLE & JACKSON — Civil & Structural Engineers

PROJECT: THE WORLD TRADE CENTER | TITLE: COLUMN SCHEDULE | DATE: 5-15-67

REVISIONS
5-1-68
6-7-68

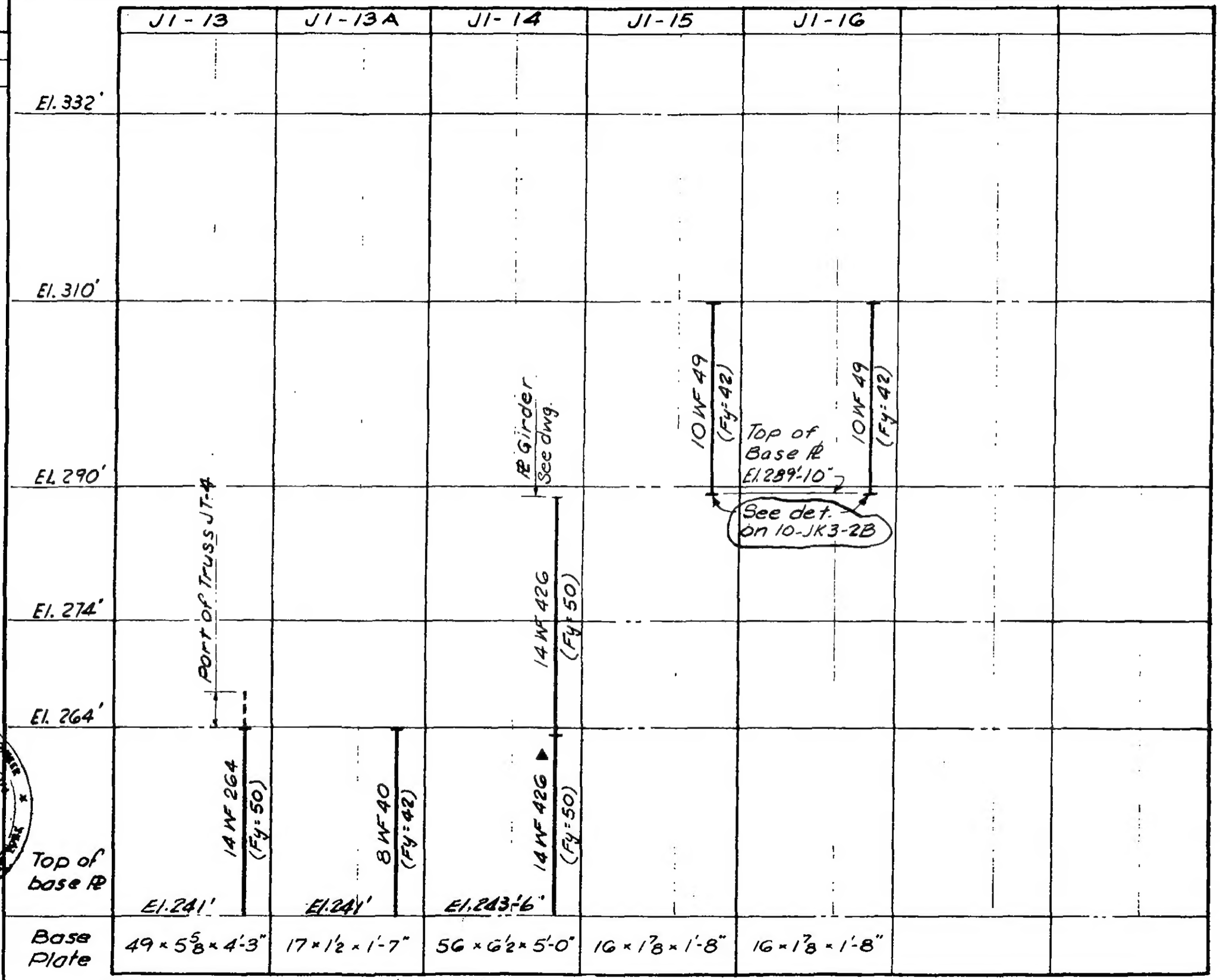

✱ Provide proper splice pls., bolt holes & finished col. top for future columns. Use upper col. one size smaller except as shown.
▲ See detail on 10-JK4-3 and 4..
■ Splice 3" above slab. See note on 10-JK2-2.
● See detail on 10-JK2-30.

10-J1-4

B

WORTHINGTON, SKILLING, HELLE & JACKSON — Civil & Structural Engineers

PROJECT: THE WORLD TRADE CENTER | TITLE: COLUMN SCHEDULE | DATE: 5-15-67

REVISIONS
2-9-68
4-5-68

	J2-1	J2-2	J2-3	J2-4	J2-5	J2-6	J2-7
El. 332'							
El. 310'				* 14 WF 95 (Fy=50)	*	*	*
Street level				El. 301'-11"?			14 WF 136 (Fy=50)
El. 294'							
El. 284'	14 WF 61 (Fy=42)	14 WF 87 (Fy=42)	14 WF 127 (Fy=50)		14 WF 136 (Fy=50)	14 WF 150 (Fy=50)	Truss JT-2 — See dwg. N-JJ-3
El. 274'	+	+	+		+	+	
El. 264'	14 WF 103 (Fy=50)	14 WF 142 (Fy=50)	14 WF 246 (Fy=50)		14 WF 264 (Fy=50)	14 WF 287 (Fy=50)	
El. 253	▲	▲	▲		▲	▲	
Top of base Pl	14 WF 103 (Fy=50) El. 249'	14 WF 142 (Fy=50) El. 249'	14 WF 246 (Fy=50) El. 249'		14 WF 264 (Fy=50) El. 249'	14 WF 287 (Fy=50) El. 249'	14 WF 142 (Fy=50) El. 243'-6"
Base Plate	22 × 1⅝ × 2'-0"	28 × 2⅜ × 2'-6"	41 × 4⅛ × 3'-8"		41 × 4 × 3'-8"	43 × 4¾ × 3'-9"	33 × 3⅛ × 3'-0"

LICENSED PROFESSIONAL ENGINEER — LESLIE E. ROBERTSON — No. 34360 — UNIVERSITY OF THE STATE OF NEW YORK

* Provide proper splice pls., bolt holes & finished col. top for future columns. Use upper col. one size smaller except as shown.
▲ See detail on 10-JK4-3 and 4.
■ Splice 3" above slab. See note on 10-JK2-2.
● See detail on 10-JK2-30.

10-J1-5

WORTHINGTON, SKILLING, HELLE & JACKSON — Civil & Structural Engineers

PROJECT: THE WORLD TRADE CENTER | TITLE: COLUMN SCHEDULE | DATE: 5-15-67

REVISIONS
2-9-68

	J2-8	J2-9	J2-10	J2-11	J2-12	J2-13	J2-14
El. 332'							
El. 310'	*	*	*	*	*	*	*
El. 294'	14 WF 176 (Fy=50)	14 WF 176 (Fy=42)	14 WF 176 (Fy=50)	14 WF 167 (Fy=50)	14 WF 167 (Fy=50)	14 WF 167 (Fy=50)	14 WF 167 (Fy=50)
El. 284'							
El. 274'	14 WF 193 (Fy=50)	14 WF 342 (Fy=50)	14 WF 342 (Fy=50)	14 WF 342 (Fy=50)	14 WF 342 (Fy=50)	14 WF 342 (Fy=50)	14 WF 193 (Fy=50)
El. 264'							
El. 253		▲ 14 WF 342 (Fy=50)	▲ 14 WF 342 (Fy=50)	▲ 14 WF 342 (Fy=50)	▲ 14 WF 342 (Fy=50)	▲ 14 WF 342 (Fy=50)	
Top of base Pl		El. 243'-6"	El. 243'-6"	El. 243'-6"	El. 243'-6"	El. 243'-6"	
Base Plate		45 × 5 × 4'-1"	45 × 5 × 4'-1"	45 × 5 × 4'-1"	45 × 5 × 4'-1"	45 × 5 × 4'-1"	

LICENSED PROFESSIONAL ENGINEER — LESLIE E. ROBERTSON — No. 34360 — UNIVERSITY OF THE STATE OF NEW YORK

* Provide proper splice pls., bolt holes & finished col. top for future columns. Use upper col. one size smaller except as shown.
▲ See detail on 10-JK4-3 and 4.
■ Splice 3" above slab. See note on 10-JK2-2.
● See detail on 10-JK2-30.

10-J1-6

WORTHINGTON, SKILLING, HELLE & JACKSON — Civil & Structural Engineers

PROJECT: THE WORLD TRADE CENTER | TITLE: COLUMN SCHEDULE | DATE: 5-15-67

REVISIONS
2-9-68
5-1-68
6-7-68

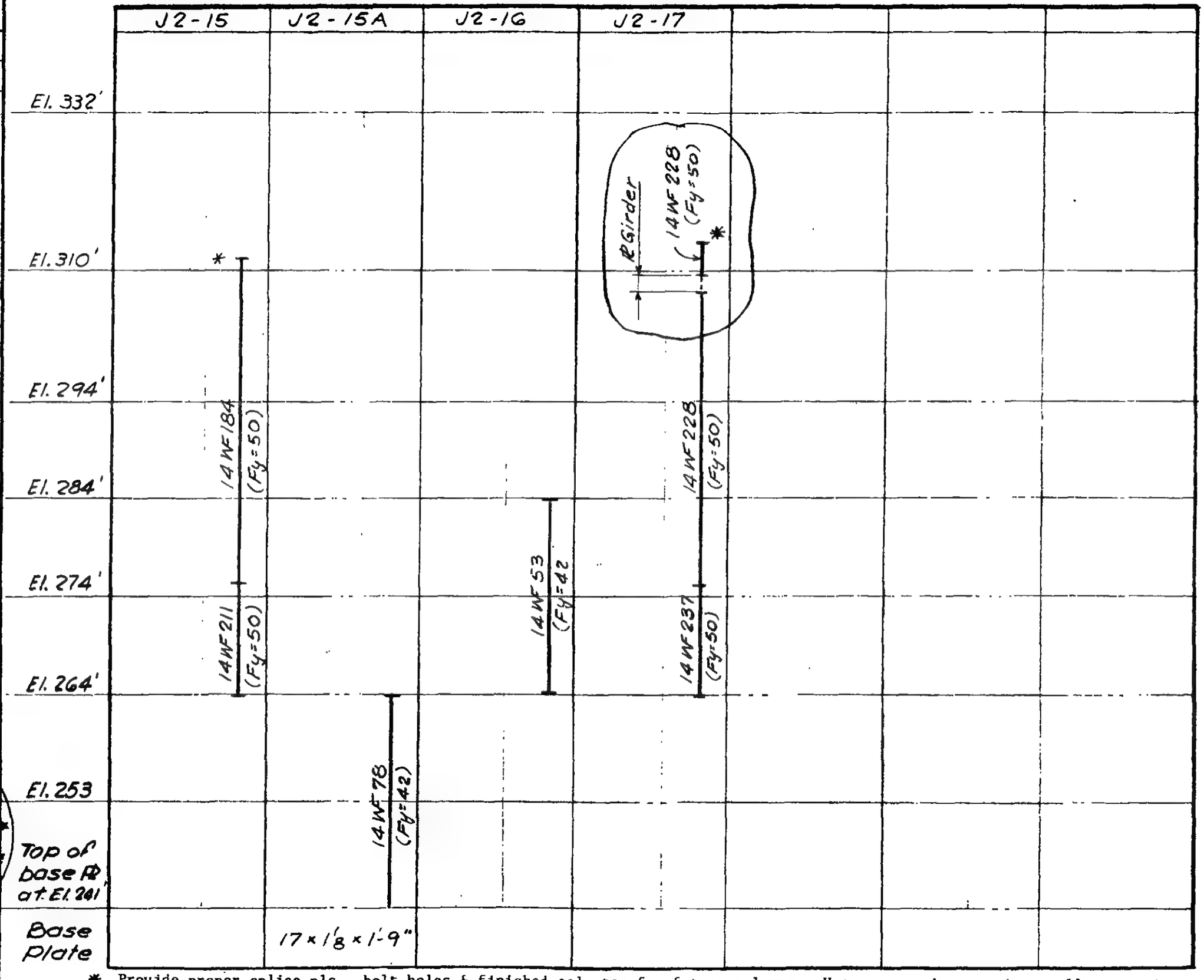

* Provide proper splice pls., bolt holes & finished col. top for future columns. Use upper col. one size smaller except as shown.
▲ See detail on 10-JK4-3 and 4.
■ Splice 3" above slab. See note on 10-JK2-2.
● See detail on 10-JK2-30.

10-J1-7

LICENSED PROFESSIONAL ENGINEER LESLIE E. ROBERTSON No. 34360 UNIVERSITY OF THE STATE OF NEW YORK

WORTHINGTON, SKILLING, HELLE & JACKSON — Civil & Structural Engineers

PROJECT: THE WORLD TRADE CENTER | TITLE: COLUMN SCHEDULE | DATE: 5-15-67

REVISIONS
5-1-68
9-4-68

	J2-18	J2-20	J2-22	J2-23	J2-23A	J2-24	J2-25
El. 332'							
El. 310'	Top of ℄ Girder			Top of ℄ Girder			
El. 290'	14WF127 (Fy=50)	14WF228 (Fy=50)		℄ Girder 14WF264 (Fy=50)	Top of Girder 14WF150 (Fy=50)		14WF150 (Fy=50)
El. 274'	Part of Truss JT.4					14WF127 (Fy=50)	
El. 264'			14WF87 (Fy=42)	14WF455 (Fy=50)		14WF314 (Fy=50)	14WF314 (Fy=50)
Top of base ℄			▲ 14WF87 (Fy=42)	▲ 14WF455 (Fy=50)		▲ 14WF314 (Fy=50)	▲ 14WF314 (Fy=50)
			El. 241'	El. 246'		El. 249'	El. 249'
Base Plate			24x2'8x2'-0"	55x6'2x5'-0"		45x4⅝x4'-0"	45x4⅝x4'-0"

LICENSED PROFESSIONAL ENGINEER — LESLIE E. ROBERTSON — No. 54300 — UNIVERSITY OF THE STATE OF NEW YORK

* Provide proper splice pls., bolt holes & finished col. top for future columns. Use upper col. one size smaller except as shown.
▲ See detail on 10-JK4-3 and 4..
■ Splice 3" above slab. See note on 10-JK2-2.
● See detail on 10-JK2-30.

10-J1-8

B

WORTHINGTON, SKILLING, HELLE & JACKSON — Civil & Structural Engineers

PROJECT: THE WORLD TRADE CENTER | TITLE: COLUMN SCHEDULE | DATE: 5-15-67

REVISIONS: 11-5-68

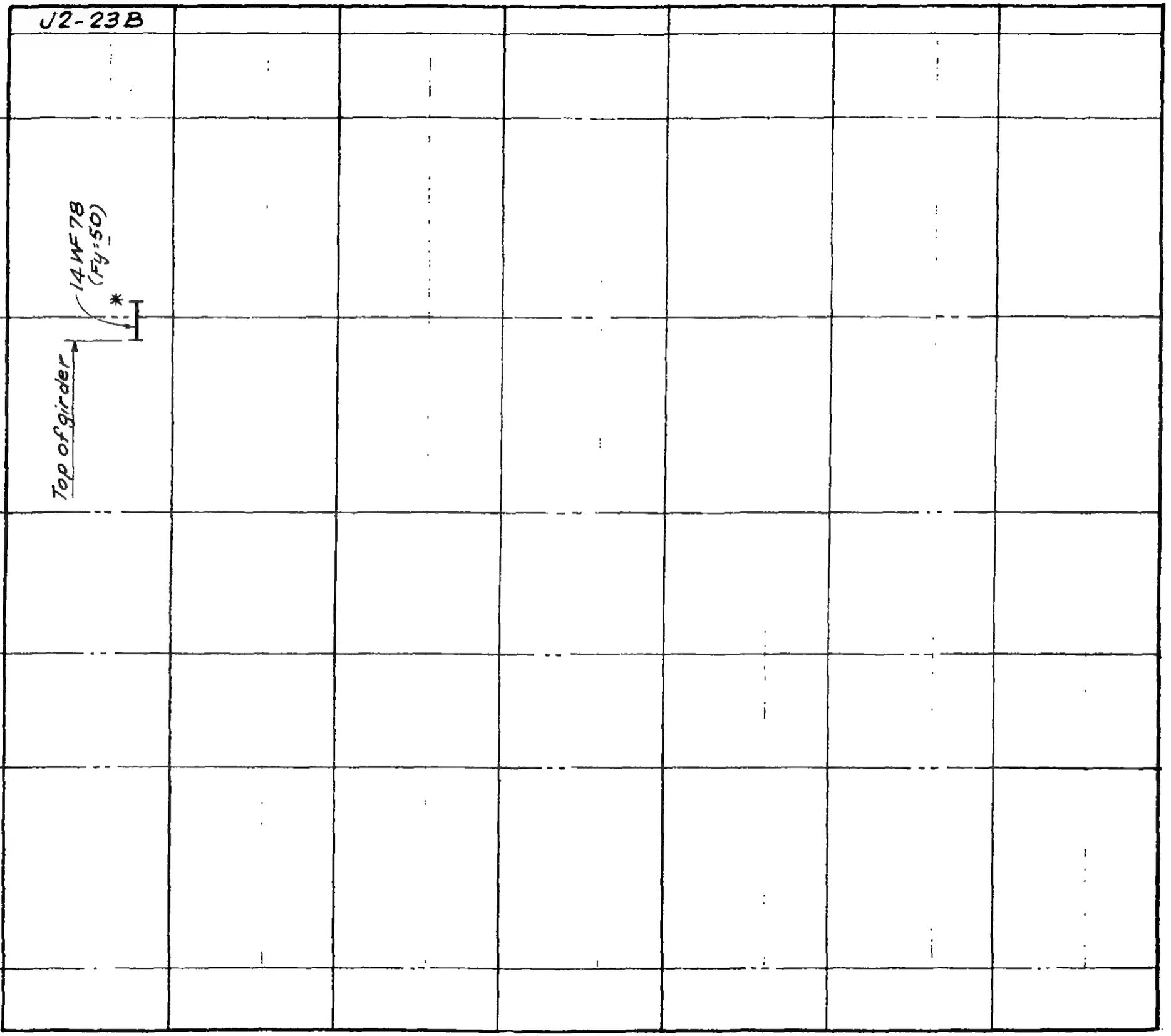

✱ Provide proper splice pls., bolt holes & finished col. top for future columns. Use upper col. one size smaller except as shown.
▲ See detail on 10-JK4-3 and 4..
■ Splice 3" above slab. See note on 10-JK2-2.
● See detail on 10-JK2-30.

10-J1-9

LICENSED PROFESSIONAL ENGINEER — LESLIE E. ROBERTSON — No. 34360 — UNIVERSITY OF THE STATE OF NEW YORK

WORTHINGTON, SKILLING, HELLE & JACKSON — Civil & Structural Engineers

PROJECT: THE WORLD TRADE CENTER | TITLE: COLUMN SCHEDULE | DATE: 5-15-67

REVISIONS
2-9-68
6-7-68
9-20-68

	J2-51	J2-52	J2-53	J2-54	J2-55	J2-56	J2-57
El. 332'							
El. 310'			14 WF 78 (Fy=42) *				
Street level			Top of Girder				
El. 294'							
El. 284'	14 WF 74 (Fy=42)	14 WF 43 (Fy=42)					
El. 274'							
El. 264'	14 WF 142 (Fy=50)	14 WF 84 (Fy=50)					
El. 253	14 WF 142 (Fy=50) ▲	14 WF 84 (Fy=50) ▲		14 WF 211 (Fy=50)	14 WF 342 (Fy=50)	14 WF 78 (Fy=42)	14 WF 119 (Fy=50)
Top of base Pl	El. 249'	El. 249'		El. 243'-6"	El. 243'-6"	El. 243'-6"	El. 243'-6"
Base Plate	28 × 2 3/8 × 2'-6"	18 × 1 1/4 × 1'-10"		39 × 4 × 3'-6"	49 × 5 5/8 × 4'-5"	17 × 1 1/8 × 1'-9"	28 × 2 3/8 × 2'-6"

LICENSED PROFESSIONAL ENGINEER — LESLIE E. ROBERTSON — No. 34360 — UNIVERSITY OF THE STATE OF NEW YORK

* Provide proper splice pls., bolt holes & finished col. top for future columns. Use upper col. one size smaller except as shown.
▲ See detail on 10-JK4-3 and 4.
■ Splice 3" above slab. See note on 10-JK2-2.
● See detail on 10-JK2-30.

10-J1-10

A

WORTHINGTON, SKILLING, HELLE & JACKSON — Civil & Structural Engineers

PROJECT: THE WORLD TRADE CENTER | TITLE: COLUMN SCHEDULE | DATE: 5-15-67

REVISIONS
5-1-68
9-4-68
9-20-68

	J2-59	J2-60				
El. 332'						
El. 310'		* 14 WF 78 (Fy = 50)				
El. 308'-1"		Top of Girder J2E				
El. 294'						
El. 284'						
El. 274'						
El. 264'						
El. 253		14 WF 287 (Fy=50)				
Top of Base Pl		El. 243'-6"				
Base Plate		47 × 5 3/8 × 4'-2"				

* Provide proper splice pls., bolt holes & finished col. top for future columns. Use upper col. one size smaller except as shown.
▲ See detail on 10-JK4-3 and 4.
■ Splice 3" above slab. See note on 10-JK2-2.
● See detail on 10-JK2-30.

10-J1-11

LICENSED PROFESSIONAL ENGINEER LESLIE E. ROBERTSON No. 54980 STATE OF NEW YORK

A

WORTHINGTON, SKILLING, HELLE & JACKSON — Civil & Structural Engineers

PROJECT: THE WORLD TRADE CENTER | TITLE: COLUMN SCHEDULE | DATE: 5-15-67

REVISIONS
2-9-68
4-5-68
5-1-68
6-17-68

	J3-1	J3-2	J3-3	J3-4	J3-5	J3-6	J3-7
El. 332'							
El. 310'	*	*	Det. 104 10-JK2-7	See Detail 1-1 on 10-JK2-36	10-JK2-17	10-JK2-17	10-JK2-17
El. 294'	14 WF 158 (Fy=50)	14 WF 127 (Fy=50)	14 WF 342 (Fy=50)	14 WF 287 (Fy=50)	14 WF 314 (Fy=50)	14 WF 314 (Fy=50)	14 WF 314 (Fy=50)
El. 284'				Truss JT-2 See dwg. 11-VI-3			
El. 274'							
El. 264'	14 WF 314 (Fy=50)	14 WF 246 (Fy=50)	14 WF 730 (Fy=46)		14 WF 426 (Fy=50)	14 WF 398 (Fy=50)	14 WF 398 (Fy=50)
El. 253	▲ 14 WF 314 (Fy=50)	▲ 14 WF 246 (Fy=50)	▲ 14 WF 730 (Fy=46)		14 WF 426 (Fy=50)	▲ 14 WF 398 (Fy=50)	▲ 14 WF 398 (Fy=50)
Top of base Pl	El. 249'	El. 249'	El. 244'		El. 241'	El. 241'	El. 241'
Base Plate	45 × 4⅝ × 4'-0"	41 × 4⅛ × 3'-8"	60 × 7¼ × 5'-7"		63 × 7¾ × 5'-7"	62 × 7½ × 5'-6"	62 × 7½ × 5'-6"

* Provide proper splice pls., bolt holes & finished col. top for future columns. Use upper col. one size smaller except as shown.
▲ See detail on 10-JK4-3 and 4.
■ Splice 3" above slab. See note on 10-JK2-2.
● See detail on 10-JK2-30.

LESLIE E. ROBERTSON — LICENSED PROFESSIONAL ENGINEER — No. 34360 — UNIVERSITY OF THE STATE OF NEW YORK

10-J1-12

A

WORTHINGTON, SKILLING, HELLE & JACKSON — Civil & Structural Engineers

PROJECT: THE WORLD TRADE CENTER | TITLE: COLUMN SCHEDULE | DATE: 5-15-67

REVISIONS
2-9-68
2-29-68
4-5-68
5-1-68
6-7-68
6-17-68

	J3-8	J3-9	J3-10	J3-11	J3-12	J3-13	J3-14
El. 332'	10-JK2-17	10-JK2-17	Det. 104 10-JK2-7				
El. 310'				*	+	R Girder; 14WF103 (Fy=50) *	
El. 294'	14WF320 (Fy=50)	14WF342 (Fy=50)	Splice, see Det. on 10-JK2-36; 14WF370 (Fy=50)	14WF136 (Fy=50)	14WF136 (Fy=50)	12-JK2-118A; 14WF103 (Fy=50)	
El. 284'			Part of Truss JT-3 See dwg. 11-J1-4				Truss JT-4
El. 274'							
El. 264'	14WF426 (Fy=50) ▲	14WF426 (Fy=50) ▲	14WF53 (Fy=42) See detail on 10-JK2-35	See detail on 12-JK2-52	14WF158 (Fy=50)	See Det. 10-JK2-35	
El. 253	14WF426 (Fy=50) ▲	14WF426 (Fy=50) ▲		14WF287 (Fy=50)			14WF158 (Fy=50)
Top of base Pl	El. 241'	El. 241'		El. 243'-6"			El. 243'-6"
Base Plate	63 × 7¾ × 5'-7"	63 × 7¾ × 5'-7"		43 × 4¾ × 3'-9"			See dwg 10-JK32A

* Provide proper splice pls., bolt holes & finished col. top for future columns. Use upper col. one size smaller except as shown.
▲ See detail on 10-JK4-3 and 4.
■ Splice 3" above slab. See note on 10-JK2-2.
● See detail on 10-JK2-30.

10-J1-13

LICENSED PROFESSIONAL ENGINEER — LESLIE E. ROBERTSON — No. 34360 — UNIVERSITY OF THE STATE OF NEW YORK

A

WORTHINGTON, SKILLING, HELLE & JACKSON — Civil & Structural Engineers

PROJECT: THE WORLD TRADE CENTER | TITLE: COLUMN SCHEDULE | DATE: 5-15-67

REVISIONS
5-1-68
9-4-68
9-20-68
11-5-68

	J3-15A	J3-15	J3-16	J3-18	J3-19	J3-20	J3-21
El. 332'							
El. 310'		See Det. 10-JK2.17 14WF78 (Fy=50)				*	*
El. 307-10"		Top of Girder J2A					
EL 290'						14WF193 (Fy=50)	14WF167 (Fy=50)
El. 274'							
El. 264'		14WF87 (Fy=42)	14WF87 (Fy=42)			14WF342 (Fy=50)	14WF342 (Fy=50)
Top of base Pl.	El. 240'-3" 14WF87 (Fy=42)				El. 243'-4" 14WF87 (Fy=42)	El. 243'-4" ▲ 14WF342 (Fy=50)	El. 249' ▲ 14WF342 (Fy=50)
Base Plate	21 × 1½ × 2'-0"				23 × 1¾ × 2'-1"	49 × 5⅝ × 4'-5"	49 × 5⅝ × 4'-5"

* Provide proper splice pls., bolt holes & finished col. top for future columns. Use upper col. one size smaller except as shown.
▲ See detail on 10-JK4-3 and 4..
■ Splice 3" above slab. See note on 10-JK2-2.
● See detail on 10-JK2-30.

LICENSED PROFESSIONAL ENGINEER LESLIE E. ROBERTSON NEW YORK

10-31-68

B

10-J1-14

WORTHINGTON, SKILLING, HELLE & JACKSON Civil & Structural Engineers

PROJECT THE WORLD TRADE CENTER | TITLE COLUMN SCHEDULE | DATE 5-15-67

REVISIONS
2-9-68
4-5-68
5-1-68

	J3-51	J3-52	J3-53	J3-54	J3-55	J3-56	J3-57
El. 332'							
El. 310'							
Street level							
El. 294'							14 WF 176 (Fy=50)
El. 284'	14 WF 87 (Fy=50)	14 WF 48 (Fy=42)					
El. 274'			Truss JT-1 See dwg. 11-J1-2	Truss JT-2 See dwg. 11-J1-3	Truss JT-3 See dwg. 11-J1-4		
El. 264'	14 WF 176 (Fy=50) ▲	14 WF 87 (Fy=50) ▲					14 WF 342 (Fy=50) ▲
El. 253	14 WF 176 (Fy=50)	14 WF 87 (Fy=50)	14 WF 500 (Fy=50)	14 WF 730 (Fy=46)	14 WF 730 (Fy=46)	14 WF 158 (Fy=50)	14 WF 342 (Fy=50)
Top of base Pl	El. 249'	El. 249'	El. 244'	El. 241'	El. 241'	El 241'	El. 243'-6"
Base Plate	31 × 2¾ × 2'-9"	21 × 1½ × 1'-11"	64 × 8 × 5'-9"	80 × 10 × 7'-3"	80 × 10 × 7'-3"	34 × 3⅜ × 2'-11"	45 × 5 × 4'-1"

✱ Provide proper splice pls., bolt holes & finished col. top for future columns. Use upper col. one size smaller except as shown.
▲ See detail on 10-JK4-3 and 4.
■ Splice 3" above slab. See note on 10-JK2-2.
● See detail on 10-JK2-30.

10-J1-15

LICENSED PROFESSIONAL ENGINEER LESLIE E. ROBERTSON No. 34260 UNIVERSITY OF THE STATE OF NEW YORK

A

WORTHINGTON, SKILLING, HELLE & JACKSON Civil & Structural Engineers

PROJECT THE WORLD TRADE CENTER | TITLE COLUMN SCHEDULE | DATE 5-15-67

REVISIONS

5-1-68

	J3-58	J3-59					
El. 332'							
El. 310'							
El. 290'							
El. 274'			14 WF 193 (Fy: 50)				
El. 264'							
Top of base PL	El. 243'-4" 14 WF 142 (Fy: 50)	El 240'-3" ▲ 14 WF 193 (Fy: 50)					
Base Plate	33 × 3 1/8 × 3'-0"	39 × 3 3/4 × 3'-5"					

* Provide proper splice pls., bolt holes & finished col. top for future columns. Use upper col. one size smaller except as shown.
▲ See detail on 10-JK4-3 and 4..
■ Splice 3" above slab. See note on 10-JK2-2.
● See detail on 10-JK2-30.

10-J1-16

LICENSED PROFESSIONAL ENGINEER LESLIE E. ROBERTSON N.Y. STATE

B

WORTHINGTON, SKILLING, HELLE & JACKSON — Civil & Structural Engineers

PROJECT: THE WORLD TRADE CENTER | TITLE: COLUMN SCHEDULE | DATE: 5-15-67

REVISIONS
2-9-68
4-5-68
6-17-68
4-18-69

	J4-1	J4-2	J4-3	J4-4	J4-5	J4-6	J4-7
El. 332'							
El. 310'	*	*	10-JK2-17	Part of truss JT-2 See dwg. 11-J1-3 / 10-JK2-17	10-JK2-17	10-JK2-17	10-JK2-17
El. 294'	14 WF 142 (Fy=50)	14 WF 127 (Fy=50)	14 WF 264 (Fy=50)	14 WF 228 (Fy=50)	14 WF 264 (Fy=50)	14 WF 264 (Fy=50)	14 WF 264 (Fy=50)
El. 284'			Truss JT-1 See dwg. 11-J1-2	10-JK2-42 / 14 WF 287 (Fy=50)			
El. 274'							
El. 264'	14 WF 287 (Fy=50)	14 WF 264 (Fy=50)		14 WF 370 (Fy=50)	14 WF 370 (Fy=50)	14 WF 370 (Fy=50)	14 WF 370 (Fy=50)
El. 253	▲ 14 WF 287 (Fy=50)	▲ 14 WF 264 (Fy=50)		▲ 14 WF 370 (Fy=50)	▲ 14 WF 370 (Fy=50)	▲ 14 WF 370 (Fy=50)	▲ 14 WF 370 (Fy=50)
* Top of base Pl	El. 249'	El. 249'		El. 241'	El. 241'	El. 241'	El. 241'
Base Plate	43 × 4¾ × 3'-9"	41 × 4 × 3'-8"		60 × 7¼ × 5'-3"	60 × 7¼ × 5'-3"	60 × 7¼ × 5'-3"	60 × 7¼ × 5'-3"

* Provide proper splice pls., bolt holes & finished col. top for future columns. Use upper col. one size smaller except as shown.
▲ See detail on 10-JK4-3 and 4.
■ Splice 3" above slab. See note on 10-JK2-2.
● See detail on 10-JK2-30.

LESLIE E. ROBERTSON — LICENSED PROFESSIONAL ENGINEER — No. 34360 — STATE OF NEW YORK

DRAWN S.C.
REVIEWED E.L.

10-J1-17

A

WORTHINGTON, SKILLING, HELLE & JACKSON — Civil & Structural Engineers

PROJECT: THE WORLD TRADE CENTER | TITLE: COLUMN SCHEDULE | DATE: 5-15-67

REVISIONS
2-9-68
4-5-68
5-1-68
6-17-68

	J4-8	J4-9	J4-10	J4-11	J4-12	J4-12A	J4-13
El. 332'	10-JK2-17	10-JK2-17	10-JK2-17	16-JK2-17	10-JK2-17		10-JK2-17
El. 310'	14WF264 (Fy=50)	14WF264 (Fy=50)	14WF264 (Fy=50)	14WF314 (Fy=50)	14WF314 (Fy=50)		14WF320 (Fy=50)
El. 294'			Truss JT-3 See dwg-41-J1-4 Splice see Det 3 10-JK2-36				
El. 284'							
El. 274'	14WF370 (Fy=50)	14WF370 (Fy=50)		14WF426 (Fy=50)	14WF342 (Fy=50)		14WF342 (Fy=50)
El. 264'	14WF370 (Fy=50) ▲	14WF370 (Fy=50) ▲	Splice see Det 4 10-JK2-36 14WF370 (Fy=50) ▲				
El. 253						14WF426 (Fy=50)	
Top of base Pl	El. 241'	El. 241'	El. 241'	El. 241'		El. 243'-6"	
Base Plate	60 × 7¼ × 5'-3"	60 × 7¼ × 5'-3"	60 × 7¼ × 5'-3"	63 × 7¾ × 5'-7"		56 × 6½ × 5'-0"	

LICENSED PROFESSIONAL ENGINEER — LESLIE E. ROBERTSON — No. 34360 — STATE OF NEW YORK

* Provide proper splice pls., bolt holes & finished col. top for future columns. Use upper col. one size smaller except as shown.
▲ See detail on 10-JK4-3 and 4.
■ Splice 3" above slab. See note on 10-JK2-2.
● See detail on 10-JK2-30.

10-J1-18

A

WORTHINGTON, SKILLING, HELLE & JACKSON — Civil & Structural Engineers

PROJECT: THE WORLD TRADE CENTER | TITLE: COLUMN SCHEDULE | DATE: 5-15-67

REVISIONS
5-1-68
6-28-68
4-4-69

	J4-14		J4-16	J4-17		J4-19	J4-20
El. 332'							
El. 310'	Part of Truss JT-5		Part of Truss JT-5				Bott. of ℄ Girder
El. 290'			14 WF 264 (Fy=50)				14 WF 550 (Fy=50)
El. 274'	Part of Truss JT-4 — 14 WF 287 (Fy=50)		Det. 7 10-JK2-36 — 14 WF 550 (Fy=50)				
El. 264'	Part of Truss JT-4		14 WF 605 +℄ 14x3 (B.S.) (Fy=46)			14 WF 87 (Fy=42)	14 WF 550 (Fy=50)
Top of base ℄	Splice, see Det. 5 10-JK2-36 — 18x17 I, 2 ℄s 17x4, 1 ℄ 10x2½ (Fy=50)		14 WF 605 +℄ 14x3 (B.S.) (Fy=46) ▲	14 WF 211 (Fy=50)			
	El. 243'-4"		El. 243'-4"	El. 243'-4"			
Base Plate	67 x 8 x 6'-1"		69 x 8¾ x 6'-9"	40 x 4 x 3'-7"			

✱ Provide proper splice pls., bolt holes & finished col. top for future columns. Use upper col. one size smaller except as shown.
▲ See detail on 10-JK4-3 and 4..
■ Splice 3" above slab. See note on 10-JK2-2.
● See detail on 10-JK2-30.

LICENSED PROFESSIONAL ENGINEER — LESLIE E. ROBERTSON — No. 34260 — UNIVERSITY OF THE STATE OF NEW YORK

DRAWN S.C.
REVIEWED E.L.

10-J1-19

B

WORTHINGTON, SKILLING, HELLE & JACKSON — Civil & Structural Engineers

PROJECT: THE WORLD TRADE CENTER | TITLE: COLUMN SCHEDULE | DATE: 5-15-67

REVISIONS
5-1-68
6-7-68

	J4-21	J4-22
El. 332'		
El. 310'		* 14 WF 211 (Fy=50)
EL 290'		
El. 274'		
El. 264'		14 WF 398 (Fy=50)
Top of base Pl	El Bott of Pl Girder 14 WF 550 (Fy=50) El. 243'-4"	El. 243'-4"
Base Plate	67 × 8 × 6'-1"	55 × 6½ × 4'-11"

* Provide proper splice pls., bolt holes & finished col. top for future columns. Use upper col. one size smaller except as shown.
▲ See detail on 10-JK4-3 and 4..
■ Splice 3" above slab. See note on 10-JK2-2.
● See detail on 10-JK2-30.

10-J1-20

LICENSED PROFESSIONAL ENGINEER LESLIE E. ROBERTSON No. 34280 UNIVERSITY OF THE STATE OF NEW YORK

B

WORTHINGTON, SKILLING, HELLE & JACKSON — Civil & Structural Engineers

PROJECT: THE WORLD TRADE CENTER | TITLE: COLUMN SCHEDULE | DATE: 5-15-67

REVISIONS
2-9-68
2-29-68
5-1-68

	J4-51	J4-52	J4-52A	J4-53	J4-54
El. 332'					
El. 310'					
Street level					
El. 294'					
El. 284'	14 WF 103 (Fy=42)	14 WF 43 (Fy=42)			
El. 274'					
El. 264'	14 WF 202 (Fy=50)	14 WF 87 (Fy=42)			
El. 253 *	▲ 14 WF 202 (Fy=50)	▲ 14 WF 87 (Fy=42)	14 WF 87 (Fy=50)	14 WF 87 (Fy=50)	14 WF 342 (Fy=50)
Top of base Pl.	El. 249'	El. 249'	El. 241'	El. 243'-6"	El. 243'-4"
Base Plate	31 × 2'-4 × 2'-9"	21 × 1½ × 1'-11"	23 × 1¾ × 2'-1"	23 × 1¾ × 2'-1"	51 × 5⅞ × 4'-7"

* Provide proper splice pls., bolt holes & finished col. top for future columns. Use upper col. one size smaller except as shown.
▲ See detail on 10-JK4-3 and 4.
■ Splice 3" above slab. See note on 10-JK2-2.
● See detail on 10-JK2-30.

10-J1-21

LICENSED PROFESSIONAL ENGINEER — LESLIE E. ROBERTSON — No. 34360 — UNIVERSITY OF THE STATE OF NEW YORK

A
3

WORTHINGTON, SKILLING, HELLE & JACKSON — Civil & Structural Engineers

PROJECT: THE WORLD TRADE CENTER | TITLE: COLUMN SCHEDULE | DATE: 5-15-67

REVISIONS
2-9-68
4-5-68
6-17-68

	J5-1		J5-3	J5-4	J5-5	J5-6	J5-7
El. 332'				10-JK2-17	10-JK2-17	10-JK2-17	10-JK2-17
El. 310'	*			14WF314 (Fy=50)			
El. 294'	14WF158 (Fy=50)		14WF87 (Fy=50)	Truss JT-1 See dwg. 11-J1-2	14WF264 (Fy=50)	14WF287 (Fy=50)	14WF314 (Fy=50)
El. 274'	14WF314 (Fy=50)		14WF167 (Fy=50)		14WF370 (Fy=50)	14WF370 (Fy=50)	14WF426 (Fy=50)
El. 264'	▲ 14WF314 (Fy=50)		▲ 14WF167 (Fy=50)	14WF237 (Fy=50)	▲ 14WF370 (Fy=50)	▲ 14WF370 (Fy=50)	▲ 14WF426 (Fy=50)
El. 253							
Top of base Pl	El. 244'-6"		El. 244'-6"	El. 241'	El. 241'	El. 241'	El. 241'
Base Plate	45 × 4⅝ × 4'-0"		31 × 2¾ × 2'-9"	49 × 5⅝ × 4'-3"	60 × 7¼ × 5'-3"	60 × 7¼ × 5'-3"	63 × 7¾ × 5'-7"

* Provide proper splice pls., bolt holes & finished col. top for future columns. Use upper col. one size smaller except as shown.
▲ See detail on 10-JK4-3 and 4.
■ Splice 3" above slab. See note on 10-JK2-2.
● See detail on 10-JK2-30.

10-J1-22

LICENSED PROFESSIONAL ENGINEER — LESLIE E. ROBERTSON — No. 34360 — UNIVERSITY OF THE STATE OF NEW YORK

A

WORTHINGTON, SKILLING, HELLE & JACKSON — Civil & Structural Engineers

PROJECT: THE WORLD TRADE CENTER | TITLE: COLUMN SCHEDULE | DATE: 5-15-67

REVISIONS
2-9-68
5-1-68
6-7-68
6-17-68

	J5-8	J5-9	J5-10	J5-11	J5-12	J5-13	J5-14
El. 332'	10-JK2-17	10-JK2-17	10-JK2-17	10-JK2-17	10-JK2-17	10-JK2-17	10-JK2-17
El. 310'							
El. 294'	14 WF 314 (Fy=50)	14 WF 314 (Fy=50)	14 WF 314 (Fy=50)	14 WF 314 (Fy=50)	14 WF 314 (Fy=50)	14 WF 320 (Fy=50)	Part of Truss JT-7
El. 284'							14 WF 370 (Fy=50)
El. 274'							
El. 264'	14 WF 398 (Fy=50)	14 WF 398 (Fy=50)	14 WF 426 (Fy=50)	14 WF 426 (Fy=50)	14 WF 426 (Fy=50)	14 WF 342 (Fy=50)	14 WF 550 (Fy=50)
El. 253	▲ 14 WF 398 (Fy=50)	▲ 14 WF 398 (Fy=50)	▲ 14 WF 426 (Fy=50)	▲ 14 WF 426 (Fy=50)	▲ 14 WF 426 (Fy=50)		▲ 14 WF 550 (Fy=50)
Top of base Pl	El. 241'	El. 241'	El. 241'	El. 241'	El. 241'		El. 243'-4"
Base Plate	62 × 7½ × 5'-6"	62 × 7½ × 5'-6"	63 × 7¾ × 5'-7"	63 × 7¾ × 5'-7"	63 × 7¾ × 5'-7"		60 × 7 × 5'-6"

* Provide proper splice pls., bolt holes & finished col. top for future columns. Use upper col. one size smaller except as shown.
▲ See detail on 10-JK4-3 and 4.
■ Splice 3" above slab. See note on 10-JK2-2.
● See detail on 10-JK2-30.

LESLIE E. ROBERTSON — No. 34360 — REGISTERED PROFESSIONAL ENGINEER — STATE OF NEW YORK

10-J1-23

A

WORTHINGTON, SKILLING, HELLE & JACKSON — Civil & Structural Engineers

PROJECT: THE WORLD TRADE CENTER | TITLE: COLUMN SCHEDULE | DATE: 5-15-67

REVISIONS
5-1-68
6-7-68
6-17-68

	J5-15		J5-17	J5-18	J5-19	J5-20	J5-21
El. 332'							
El. 310'					10-JK2-17		*
El. 290'					14 WF 500 (Fy=50)		14 WF 237 (Fy=50)
El. 274'	14 WF 158 (Fy=50)		14 WF 142 (Fy=50)		@ Girder		
El. 264'					14 WF 61 (Fy=42)		14 WF 455 (Fy=50)
Top of base @	See detail 10-JK4-4B; 14 WF 158 (Fy=50); El. 243'-4"		14 WF 142 (Fy=50) ▲; El. 243'-4"	Bott. of @ Girder See dwg. 14 WF 370 (Fy=50) ▲; El. 241'-9"	See detail on 10-JK2-35	Bott. of @ Girder See dwg. 14 WF 550 (Fy=50) ▲; El. 241'	14 WF 455 (Fy=50) ▲; El. 241'
Base Plate	35 × 3¼ × 3'-1"		33 × 3⅛ × 3'-0"	53 × 6¼ × 4'-9"		59 × 7 × 5'-5"	55 × 6½ × 5'-0"

* Provide proper splice pls., bolt holes & finished col. top for future columns. Use upper col. one size smaller except as shown.
▲ See detail on 10-JK4-3 and 4..
■ Splice 3" above slab. See note on 10-JK2-2.
● See detail on 10-JK2-30.

10-J1-24

LICENSED PROFESSIONAL ENGINEER LESLIE E. ROBERTSON No. 34260 UNIVERSITY OF THE STATE OF NEW YORK

B

WORTHINGTON, SKILLING, HELLE & JACKSON — Civil & Structural Engineers

PROJECT: THE WORLD TRADE CENTER | TITLE: COLUMN SCHEDULE | DATE: 5-15-67

REVISIONS
2-9-68
5-1-68

	J5-51	J5-52	J5-53	J5-54
El. 332'				
El. 310'				
Street level				
El. 294'				
El. 284'	14 WF 87 (Fy = 50)	14 WF 43 (Fy = 42)		
El. 274'				
El. 264'	14 WF 176 (Fy = 50)	14 WF 87 (Fy = 50)		Truss JF-7
El. 253	▲ 14 WF 176 (Fy = 50)	▲ 14 WF 87 (Fy = 50)	14 WF 426 (Fy = 50)	14 WF 665 (Fy = 46)
Top of base Pl	El. 249'	El. 249'	El. 241'	El. 243'-4"
Base Plate	31 × 2¾ × 2'-9"	21 × 1½ × 1'-11"	56 × 6½ × 5'-0"	69 × 8½ × 6'-4"

* Provide proper splice pls., bolt holes & finished col. top for future columns. Use upper col. one size smaller except as shown.
▲ See detail on 10-JK4-3 and 4.
■ Splice 3" above slab. See note on 10-JK2-2.
● See detail on 10-JK2-30.

10-J1-25

LICENSED PROFESSIONAL ENGINEER — LESLIE E. ROBERTSON — No. 34360 — UNIVERSITY OF THE STATE OF NEW YORK

A

WORTHINGTON, SKILLING, HELLE & JACKSON — Civil & Structural Engineers

PROJECT THE WORLD TRADE CENTER | TITLE COLUMN SCHEDULE | DATE 5-15-67

REVISIONS
5-1-68

	J5-55	J5-56
El. 332'		
El. 310'	Part of Truss JT-6 See dwg.	Part of Truss JT-6 See dwg.
El. 290'		
El. 274'	14 WF 246 (Fy=50)	Temp. Bracing 14 WF 455 (Fy=50)
El. 264'		
Top of base Pl.	▲ 14 WF 246 (Fy=50)	See detail 10-JK4-4B 14 WF 455 (Fy=50)
	El. 243'-4"	El. 243'-4"
Base Plate	41 × 4'8 × 3'-8"	59 × 7 × 5'-5"

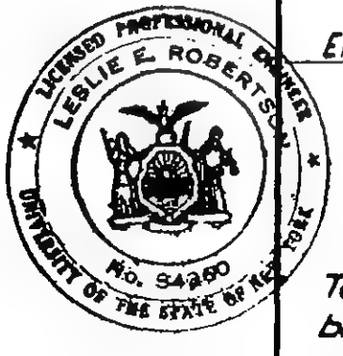

✱ Provide proper splice pls., bolt holes & finished col. top for future columns. Use upper col. one size smaller except as shown.
▲ See detail on 10-JK4-3 and 4..
■ Splice 3" above slab. See note on 10-JK2-2.
● See detail on 10-JK2-30.

10-J1-26

B

WORTHINGTON, SKILLING, HELLE & JACKSON — Civil & Structural Engineers

PROJECT: THE WORLD TRADE CENTER | TITLE: COLUMN SCHEDULE | DATE: 5-15-67

REVISIONS
2-9-68
4-5-68
6-17-68

	JG-1	JG-2	JG-3	JG-4	JG-5	JG-6	JG-7
El. 332'		10-JK2-17	10-JK2-17	10-JK2-17	10-JK2-17	10-JK2-17	10-JK2-17
El. 310'	*						
El. 294'	14 WF 158 (Fy=50)		14 WF 287 (Fy=50)	14 WF 287 (Fy=50)	14 WF 320 (Fy=50)	14 WF 314 (Fy=50)	14 WF 314 (Fy=50)
El. 284'		14 WF 320 (Fy=50)					
El. 274'		Part of truss JT-1 to JT-2 See dwg. 11-J1-2					
El. 264'	14 WF 237 (Fy=50)		14 WF 370 (Fy=50)	14 WF 370 (Fy=50)	14 WF 426 (Fy=50)	14 WF 398 (Fy=50)	14 WF 398 (Fy=50)
El. 253	▲ 14 WF 237 (Fy=50)	14 WF 730 (Fy=46)	▲ 14 WF 370 (Fy=50)	▲ 14 WF 370 (Fy=50)	▲ 14 WF 426 (Fy=50)	▲ 14 WF 398 (Fy=50)	▲ 14 WF 398 (Fy=50)
Top of base Pl at El. 241'							
Base Plate	46 × 4¾ × 4'-1"	80 × 10 × 7'-3"	60 × 7¼ × 5'-3"	60 × 7¼ × 5'-3"	63 × 7¾ × 5'-7"	62 × 7½ × 5'-6"	62 × 7½ × 5'-6"

LICENSED PROFESSIONAL ENGINEER — LESLIE E. ROBERTSON — No. 34360 — UNIVERSITY OF THE STATE OF NEW YORK

* Provide proper splice pls., bolt holes & finished col. top for future columns. Use upper col. one size smaller except as shown.
▲ See detail on 10-JK4-3 and 4.
■ Splice 3" above slab. See note on 10-JK2-2.
● See detail on 10-JK2-30.

10-J1-27

A

WORTHINGTON, SKILLING, HELLE & JACKSON — Civil & Structural Engineers

PROJECT: THE WORLD TRADE CENTER | TITLE: COLUMN SCHEDULE | DATE: 5-15-67

REVISIONS
- 2-9-68
- 5-1-68
- 6-7-68
- 6-17-68

	JG-8	JG-9	JG-10	JG-11	JG-12
El. 332'	10-JK2-17	10-JK2-17	10-JK2-17	10-JK2-17	10-JK2-17
El. 310'					
El. 294'	14 WF 342 (Fy=50)	14 WF 342 (Fy=50)	14 WF 342 (Fy=50)	14 WF 342 (Fy=50)	14 WF 342 (Fy=50)
El. 284'					Part of Truss JT-7
El. 274'	14 WF 426 (Fy=50)	14 WF 426 (Fy=50)	14 WF 426 (Fy=50)	14 WF 426 (Fy=50)	
El. 264'	▲	▲	▲	▲	AWF53 (Fy=42)
El. 253	14 WF 426 (Fy=50)	14 WF 426 (Fy=50)	14 WF 426 (Fy=50)	14 WF 426 (Fy=50)	See detail 10-JK2-35
Top of base Pl at El. 241'					
Base Plate	63 × 7¾ × 5'-7"	63 × 7¾ × 5'-7"	63 × 7¾ × 5'-7"	63 × 7¾ × 5'-7"	

* Provide proper splice pls., bolt holes & finished col. top for future columns. Use upper col. one size smaller except as shown.
▲ See detail on 10-JK4-3 and 4.
■ Splice 3" above slab. See note on 10-JK2-2.
● See detail on 10-JK2-30.

10-J1-28

LICENSED PROFESSIONAL ENGINEER — LESLIE E. ROBERTSON — No. 34360 — UNIVERSITY OF THE STATE OF NEW YORK

A

WORTHINGTON, SKILLING, HELLE & JACKSON — Civil & Structural Engineers

PROJECT: THE WORLD TRADE CENTER | TITLE: COLUMN SCHEDULE | DATE: 5-15-67

REVISIONS
5-1-68
6-17-68

	JG-13		JG-15	JG-16	JG-17		
El. 332'							
El. 310'				10-JK2-17			
EL 290'				Top of ℄ Girder	14 WF 455 (Fy=50)	* 14 WF 246 (Fy=50)	
El. 274'	14 WF 111 (Fy=50)		14 WF 136 (Fy=50)				
El. 264'			See detail 10-JK4-4B			14 WF 455 (Fy=50)	
Top of base ℄	▲ 14 WF 111 (Fy=50) El. 243'-4"		14 WF 136 (Fy=50) El. 243'-9"			▲ 14 WF 455 (Fy=50) El. 243'-9"	
Base Plate	29 × 2½ × 2'-7"		32 × 3 × 2'-11"		55 × 6½ × 5'-0"		

* Provide proper splice pls., bolt holes & finished col. top for future columns. Use upper col. one size smaller except as shown.
▲ See detail on 10-JK4-3 and 4..
■ Splice 3" above slab. See note on 10-JK2-2.
● See detail on 10-JK2-30.

10-J1-29

LICENSED PROFESSIONAL ENGINEER LESLIE E. ROBERTSON No. 54350 UNIVERSITY OF THE STATE OF NEW YORK

B

WORTHINGTON, SKILLING, HELLE & JACKSON — Civil & Structural Engineers

PROJECT: THE WORLD TRADE CENTER | TITLE: COLUMN SCHEDULE | DATE: 5-15-67

REVISIONS
2-9-68

	JG-51
El. 332'	
El. 310'	
Street level	
El. 294'	14 WF 87 (Fy=50)
El. 284'	
El. 274'	
El. 264'	14 WF 167 (Fy=50)
El. 253	▲ 14 WF 167 (Fy=50)
Top of base Pl	
El. 245'	
Base Plate	32 × 2 7/8 × 2'-9"

✱ Provide proper splice pls., bolt holes & finished col. top for future columns. Use upper col. one size smaller except as shown.
▲ See detail on 10-JK4-3 and 4.
■ Splice 3" above slab. See note on 10-JK2-2.
● See detail on 10-JK2-30.

10-J1-31

A

WORTHINGTON, SKILLING, HELLE & JACKSON — Civil & Structural Engineers

PROJECT: THE WORLD TRADE CENTER | TITLE: COLUMN SCHEDULE | DATE: 5-15-67

REVISIONS
2-9-68
6-17-68

	J7-1	J7-2	J7-3	J7-4	J7-5	J7-6	J7-7
El. 332'		Det. 104 10-JK2-7	10-JK2-17	10-JK2-17	10-JK2-17	10-JK2-17	10-JK2-17
El. 310'	*						
El. 294'	14 WF 150 (Fy=50)	14 WF 370 (Fy=50)	14 WF 342 (Fy=50)	14 WF 314 (Fy=50)	14 WF 287 (Fy=50)	14 WF 287 (Fy=50)	14 WF 287 (Fy=50)
El. 284'							
El. 274'							
El. 264'	14 WF 246 (Fy=50)	14 WF 455 (Fy=50)	14 WF 455 (Fy=50)	14 WF 426 (Fy=50)	14 WF 370 (Fy=50)	14 WF 370 (Fy=50)	14 WF 370 (Fy=50)
El. 253	▲ 14 WF 246 (Fy=50)	▲ 14 WF 455 (Fy=50)	▲ 14 WF 455 (Fy=50)	▲ 14 WF 426 (Fy=50)	▲ 14 WF 370 (Fy=50)	▲ 14 WF 370 (Fy=50)	▲ 14 WF 370 (Fy=50)
Top of base Pl at El. 241'							
Base Plate	45 × 5⅛ × 3'-11"	64 × 8 × 5'-9"	64 × 8 × 5'-9"	63 × 7¾ × 5'-7"	60 × 7¼ × 5'-3"	60 × 7¼ × 5'-3"	60 × 7¼ × 5'-3"

LICENSED PROFESSIONAL ENGINEER — LESLIE E. ROBERTSON — No. 34360 — UNIVERSITY OF THE STATE OF NEW YORK

✱ Provide proper splice pls., bolt holes & finished col. top for future columns. Use upper col. one size smaller except as shown.
▲ See detail on 10-JK4-3 and 4.
■ Splice 3" above slab. See note on 10-JK2-2.
● See detail on 10-JK2-30.

10-J1-32

A

WORTHINGTON, SKILLING, HELLE & JACKSON — Civil & Structural Engineers

PROJECT: THE WORLD TRADE CENTER | TITLE: COLUMN SCHEDULE | DATE: 5-15-67

REVISIONS
2-9-68
5-1-68
6-17-68

	J7-8	J7-9	J7-10	J7-11	J7-12	J7-13
El. 332'	10-JK2-17	10-JK2-17	10-JK2-17	10-JK2-17		10-JK2-17
El. 310'	14 WF 287 (Fy=50)	14 WF 287 (Fy=50)	14 WF 287 (Fy=50)	14 WF 287 (Fy=50)		14 WF 264 (Fy=50)
El. 294'					Port of Truss J7-8	3'-0"
El. 284'						Port of Truss J7-8
El. 274'	14 WF 370 (Fy=50)	14 WF 398 (Fy=50)	14 WF 370 (Fy=50)	14 WF 370 (Fy=50)		
El. 264'	14 WF 370 ▲ (Fy=50)	14 WF 398 ▲ (Fy=50)	14 WF 370 ▲ (Fy=50)	14 WF 370 ▲ (Fy=50)	14 WF 87 (Fy=42)	
El. 253 *					14 WF 246 (Fy=50)	
Top of base Pl.	El. 241'	El. 241'	El. 241'	El. 241'	El. 241'	
Base Plate	60 × 7¼ × 5'-3"	62 × 7½ × 5'-6"	60 × 7¼ × 5'-3"	60 × 7¼ × 5'-3"	49 × 5⅝ × 4'-3"	

LICENSED PROFESSIONAL ENGINEER — LESLIE E. ROBERTSON — No. 34360 — UNIVERSITY OF THE STATE OF NEW YORK

* Provide proper splice pls., bolt holes & finished col. top for future columns. Use upper col. one size smaller except as shown.
▲ See detail on 10-JK4-3 and 4.
■ Splice 3" above slab. See note on 10-JK2-2.
● See detail on 10-JK2-30.

10-J1-33

A

WORTHINGTON, SKILLING, HELLE & JACKSON — Civil & Structural Engineers

PROJECT: THE WORLD TRADE CENTER | TITLE: COLUMN SCHEDULE | DATE: 5-15-67

REVISIONS
5-1-68

	J7-15
El. 332'	
El. 310'	
El. 290'	Both of ℄ Girder 14 WF 500 (Fy-50)
El. 279'-3"	
El. 274'	℄ Girder
El. 264'	
El. 253	
Top of Base Pl.	
Base Plate	

* Provide proper splice pls., bolt holes & finished col. top for future columns. Use upper col. one size smaller except as shown.
▲ See detail on 10-JK4-3 and 4.
■ Splice 3" above slab. See note on 10-JK2-2.
● See detail on 10-JK2-30.

10-J1-35

LICENSED PROFESSIONAL ENGINEER LESLIE E. ROBERTSON No. 34360 UNIVERSITY OF THE STATE OF NEW YORK

C

WORTHINGTON, SKILLING, HELLE & JACKSON — Civil & Structural Engineers

PROJECT: THE WORLD TRADE CENTER | TITLE: COLUMN SCHEDULE | DATE: 5-15-67

REVISIONS
5-1-68
6-7-68
9-4-68

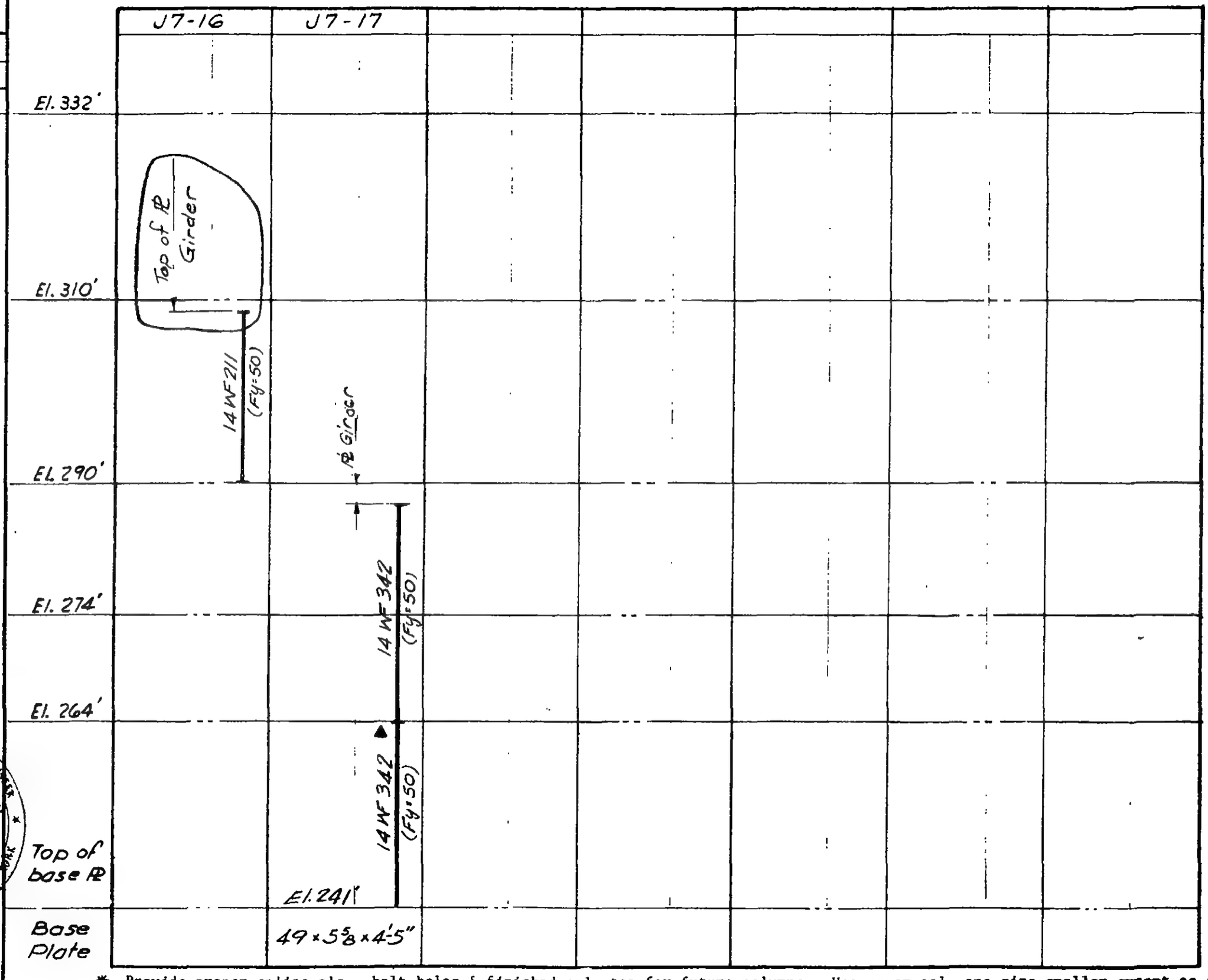

* Provide proper splice pls., bolt holes & finished col. top for future columns. Use upper col. one size smaller except as shown.
▲ See detail on 10-JK4-3 and 4..
■ Splice 3" above slab. See note on 10-JK2-2.
● See detail on 10-JK2-30.

10-J1-36

LICENSED PROFESSIONAL ENGINEER — LESLIE E. ROBERTSON — No. 34360 — UNIVERSITY OF THE STATE OF NEW YORK

B

WORTHINGTON, SKILLING, HELLE & JACKSON — Civil & Structural Engineers

PROJECT: THE WORLD TRADE CENTER | TITLE: COLUMN SCHEDULE | DATE: 5-15-67

REVISIONS
2-9-68

	J7-51	J7-52	J7-53
El. 332'			
El. 310'			
Street level			
El. 294'			
El. 284'	14WF87 (Fy=50)	14WF84 (Fy=42)	
El. 274'			
El. 264'	14WF127 (Fy=50)	14WF119 (Fy=50)	
El. 253	▲ 14WF127 (Fy=50)	▲ 14WF119 (Fy=50)	
Top of base Pl at El. 241'			
Base Plate	33 × 3¼ × 3'-0"	32 × 3 × 2'-9"	

LICENSED PROFESSIONAL ENGINEER — LESLIE E. ROBERTSON — No. 34360 — UNIVERSITY OF THE STATE OF NEW YORK

✱ Provide proper splice pls., bolt holes & finished col. top for future columns. Use upper col. one size smaller except as shown.
▲ See detail on 10-JK4-3 and 4.
■ Splice 3" above slab. See note on 10-JK2-2.
● See detail on 10-JK2-30.

10-J1-37

A

WORTHINGTON, SKILLING, HELLE & JACKSON — Civil & Structural Engineers

PROJECT: THE WORLD TRADE CENTER | TITLE: COLUMN SCHEDULE | DATE: 5-15-67

REVISIONS
- 2-9-68
- 4-5-68
- 6-17-68
- 11-5-68

	J8-1	J8-2	J8-3	J8-4	J8-5	J8-6	J8-7
El. 332'							
El. 310'	*	*	10-JK2-17	10-JK2-17	10-JK2-17	See detail 10-JK2-17; 3'-0"; 14WF211 (Fy=50)	10-JK2-17
El. 294'							
El. 284'	14WF158 (Fy=50)	14WF142 (Fy=50)	14WF320 (Fy=50)	14WF287 (Fy=50)	14WF264 (Fy=50)	See detail 10-JK2-34; 22⅝ × 15⅞ I; 2 PLS 15⅞ × 2½; 1 PL 17⅝ × 1½ (Fy=50)	14WF287 (Fy=50)
El. 274'							
El. 264'	14WF264 (Fy=50)	14WF228 (Fy=50)	14WF426 (Fy=50)	14WF370 (Fy=50)	14WF370 (Fy=50)	14WF370 (Fy=50)	14WF398 (Fy=50)
El. 253	▲ 14WF264 (Fy=50)	▲ 14WF228 (Fy=50)	▲ 14WF426 (Fy=50)	▲ 14WF370 (Fy=50)	▲ 14WF370 (Fy=50)	▲ 14WF370 (Fy=50)	▲ 14WF398 (Fy=50)
Top of base Pl at El. 241'							
Base Plate	49 × 5⅝ × 4'-3"	47 × 5 × 4'-2"	63 × 7¾ × 5'-7"	60 × 7¼ × 5'-3"	60 × 7¼ × 5'-3"	60 × 7¼ × 5'-3"	62 × 7½ × 5'-6"

* Provide proper splice pls., bolt holes & finished col. top for future columns. Use upper col. one size smaller except as shown.
▲ See detail on 10-JK4-3 and 4.
■ Splice 3" above slab. See note on 10-JK2-2.
● See detail on 10-JK2-30.

LICENSED PROFESSIONAL ENGINEER — LESLIE E. ROBERTSON — No. 34360 — UNIVERSITY OF THE STATE OF NEW YORK

10-31-68

A

10-J1-38

WORTHINGTON, SKILLING, HELLE & JACKSON — Civil & Structural Engineers

PROJECT: THE WORLD TRADE CENTER | TITLE: COLUMN SCHEDULE | DATE: 5-15-67

REVISIONS
2-9-68
5-1-68
6-17-68

	J8-8	J8-9	J8-10
El. 332'	10-JK2-17	10-JK2-17	10-JK2-17
El. 310'			
El. 294'	14 WF 287 (Fy=50)	14 WF 342 (Fy=50)	14 WF 370 (Fy=50)
El. 284'			
El. 274'			
El. 264'	14 WF 370 (Fy=50)	14 WF 426 (Fy=50)	14 WF 455 (Fy=50)
El. 253	▲ 14 WF 370 (Fy=50)	▲ 14 WF 426 (Fy=50)	▲ 14 WF 455 (Fy=50)
Top of base Pl	El. 241'	El. 241'	El. 241'
Base Plate	60 × 7¼ × 5'-3"	63 × 7¾ × 5'-7"	66 × 8 × 5'-11"

* Provide proper splice pls., bolt holes & finished col. top for future columns. Use upper col. one size smaller except as shown.
▲ See detail on 10-JK4-3 and 4.
■ Splice 3" above slab. See note on 10-JK2-2.
● See detail on 10-JK2-30.

10-J1-39

LICENSED PROFESSIONAL ENGINEER — LESLIE E. ROBERTSON — No. 34360 — UNIVERSITY OF THE STATE OF NEW YORK

A

WORTHINGTON, SKILLING, HELLE & JACKSON Civil & Structural Engineers

PROJECT THE WORLD TRADE CENTER | TITLE COLUMN SCHEDULE | DATE 5-15-67

REVISIONS
5-1-68
6-17-68

	J8-12	J8-13
El. 332'	10-JK2-17	
El. 310'	14 WF 342 (Fy=50)	14 WF 287 (Fy=50)
EL 290'	Part of Truss JT-10	Part of Truss JT-10
El. 274'		
El. 264'		
Top of base PL		
Base Plate		

* Provide proper splice pls., bolt holes & finished col. top for future columns. Use upper col. one size smaller except as shown.
▲ See detail on 10-JK4-3 and 4..
■ Splice 3" above slab. See note on 10-JK2-2.
● See detail on 10-JK2-30.

10-J1-40

LICENSED PROFESSIONAL ENGINEER LESLIE E. ROBERTSON No. 34360 STATE OF NEW YORK

B

WORTHINGTON, SKILLING, HELLE & JACKSON Civil & Structural Engineers

PROJECT THE WORLD TRADE CENTER | TITLE COLUMN SCHEDULE | DATE 5-15-67

REVISIONS

2-9-68

	J8-51		J8-53	J8-54			
El. 332'							
El. 310'			*				
Street level							
El. 294'	14 WF 95 (Fy=50)		14 WF 150 (Fy=50)				
El. 284'				14 WF 87 (Fy=42)			
El. 274'							
El. 264'	14 WF 176 (Fy=50)		14 WF 211 (Fy=50)	14 WF 103 (Fy=50)			
El. 253	▲ 14 WF 176 (Fy=50)		▲ 14 WF 211 (Fy=50)	▲ 14 WF 103 (Fy=50)			
Top of base Pl at El. 241'							
Base Plate	39 × 3 7/8 × 3'-5"		44 × 4 5/8 × 3'-11"	31 × 2 7/8 × 2'-9"			

* Provide proper splice pls., bolt holes & finished col. top for future columns. Use upper col. one size smaller except as shown.
▲ See detail on 10-JK4-3 and 4.
■ Splice 3" above slab. See note on 10-JK2-2.
● See detail on 10-JK2-30.

10-J1-41

LICENSED PROFESSIONAL ENGINEER LESLIE E. ROBERTSON No. 34360 UNIVERSITY OF THE STATE OF NEW YORK

A

WORTHINGTON, SKILLING, HELLE & JACKSON — Civil & Structural Engineers

PROJECT: THE WORLD TRADE CENTER | TITLE: COLUMN SCHEDULE | DATE: 5-15-67

REVISIONS
5-1-68
6-7-68

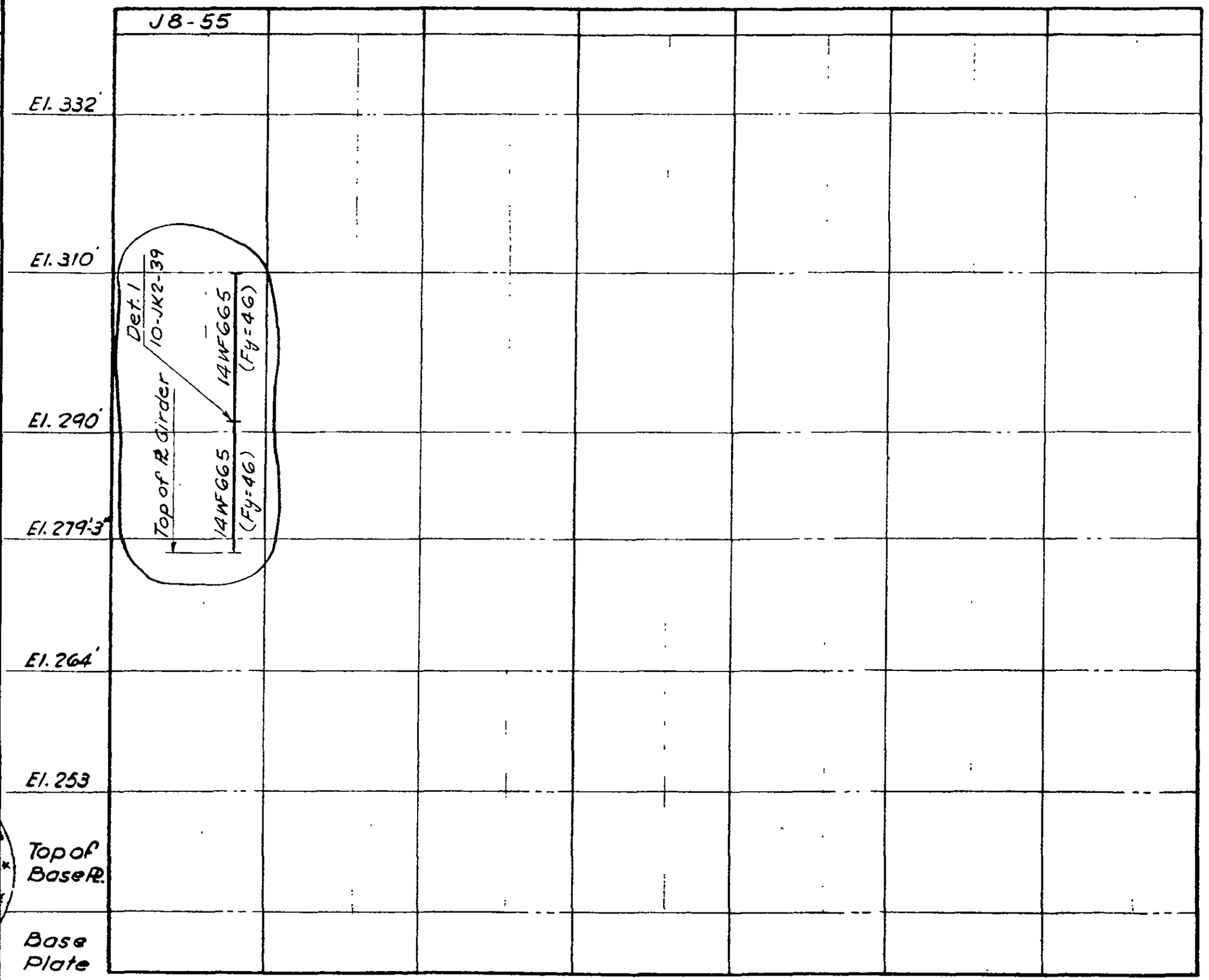

LICENSED PROFESSIONAL ENGINEER
LESLIE E. ROBERTSON
No. 84360
UNIVERSITY OF THE STATE OF NEW YORK

✱ Provide proper splice pls., bolt holes & finished col. top for future columns. Use upper col. one size smaller except as shown.
▲ See detail on 10-JK4-3 and 4.
■ Splice 3" above slab. See note on 10-JK2-2.
● See detail on 10-JK2-30.

10-J1-42

C

WORTHINGTON, SKILLING, HELLE & JACKSON — Civil & Structural Engineers

PROJECT: THE WORLD TRADE CENTER | TITLE: COLUMN SCHEDULE | DATE: 5-15-67

REVISIONS
1-20-67
11-8-67
6-17-68
1-8-69

	J9-1	J9-2	J9-3	J9-4	J9-5	J9-6	J9-7
El. 332'							
El. 310'	10-JK2-17	10-JK2-17	10-JK2-17	10-JK2-17	10-JK2-17	10-JK2-38A	*
El. 294'	14 WF 398 (Fy=50)	14 WF 370 (Fy=50)	14 WF 370 (Fy=50)	14 WF 370 (Fy=50)	14 WF 370 (Fy=50)	14 WF 398 (Fy=50)	14 WF 176 (Fy=50)
El. 284'							
El. 274'							
El. 264'	14 WF 426 (Fy=50)	14 WF 426 (Fy=50)	14 WF 426 (Fy=50)	14 WF 426 (Fy=50)	14 WF 426 (Fy=50)	14 WF 426 (Fy=50)	14 WF 167 (Fy=50)
El. 253	▲ 14 WF 500 (Fy=50)	▲ 14 WF 455 (Fy=50)	▲ 14 WF 455 (Fy=50)	▲ 14 WF 455 (Fy=50)	▲ 14 WF 455 (Fy=50)	▲ 14 WF 500 (Fy=50)	▲ 14 WF 228 (Fy=50)
Top of base Pl at El. 241'							
Base Plate	60 × 7½ × 5'-5"	60 × 7½ × 5'-5"	60 × 7½ × 5'-5"	60 × 7½ × 5'-5"	60 × 7½ × 5'-5"	62 × 7½ × 5'-6"	44 × 4⅞ × 3'-10"

LICENSED PROFESSIONAL ENGINEER — LESLIE E. ROBERTSON — No. 34360 — UNIVERSITY OF THE STATE OF NEW YORK

DRAWN S.C.
REVIEWED E.L.

*Provide proper splice pls., bolt holes & finished col. top for future columns. Use upper col. one size smaller except as shown.
▲See detail on 10-JK4-3 and 4.
■Splice 3" above slab. See note on 10-JK2-2.
●See detail on 10-JK2-30.

10-J1-43

WORTHINGTON, SKILLING, HELLE & JACKSON — Civil & Structural Engineers

PROJECT: THE WORLD TRADE CENTER | TITLE: COLUMN SCHEDULE | DATE: 5-15-67

REVISIONS
9-20-67
11-8-67

J9-8

El. 332'

El. 310'

(*) 14 WF 167 (Fy=50)

El. 294'

El. 284'

El. 274'

(+) 14 WF 211 (Fy=50)

El. 264'

(▲) 14 WF 246 (Fy=50)

El. 253

Top of base Pl at El. 241'

Base Plate — 46 × 4 7/8 × 4'-1"

*Provide proper splice pls., bolt holes & finished col. top for future columns. Use upper col. one size smaller except as shown.
▲See detail on 10-JK4-3 and 4.
■Splice 3" above slab. See note on 10-JK2-2.
●See detail on 10-JK2-30.

10-J1-44

LICENSED PROFESSIONAL ENGINEER — LESLIE E. ROBERTSON — No. 34360 — THE STATE OF NEW YORK

A

WORTHINGTON, SKILLING, HELLE & JACKSON — Civil & Structural Engineers

PROJECT THE WORLD TRADE CENTER | TITLE COLUMN SCHEDULE | DATE 5-15-67

REVISIONS

7-1-68

J9-9
El. 332'
El. 310'
* 14WF150 (Fy=50)
El. 290'
El. 274'
El. 264'
Top of base PL +1 El.
Base Plate

* Provide proper splice pls., bolt holes & finished col. top for future columns. Use upper col. one size smaller except as shown.
▲ See detail on 10-JK4-3 and 4..
■ Splice 3" above slab. See note on 10-JK2-2.
● See detail on 10-JK2-30.

10-J1-45

LICENSED ... LESLIE ... No. 34360 ... UNIVERSITY OF THE STATE OF NEW ...

B

WORTHINGTON, SKILLING, HELLE & JACKSON — Civil & Structural Engineers

PROJECT: THE WORLD TRADE CENTER | TITLE: COLUMN SCHEDULE | DATE: 5-15-67

REVISIONS
9-20-67
11-8-67

	J10-1	J10-2	J10-3	J10-4
El. 332'				
El. 310'		*	*	*
Street level				
El. 294'	14 WF 74 (Fy=50)	14 WF 142 (Fy=50)	14 WF 136 (Fy=50)	14 WF 142 (Fy=50)
El. 284'				
El. 274'	▲	▲	▲	▲
El. 264'	14 WF 87 (Fy=50)	14 WF 167 (Fy=50)	14 WF 158 (Fy=50)	14 WF 167 (Fy=50)
El. 253	14 WF 95 (Fy=50)	14 WF 246 (Fy=50)	14 WF 228 (Fy=50)	14 WF 237 (Fy=50)
Top of base Pl at El. 241'				
Base Plate	30 × 2½ × 2'-1"	48 × 4¾ × 3'-9"	44 × 4⅝ × 3'-11"	46 × 4¾ × 3'-10"

* Provide proper splice pls., bolt holes & finished col. top for future columns. Use upper col. one size smaller except as shown.
▲ See detail on 10-JK4-3 and 4.
■ Splice 3" above slab. See note on 10-JK2-2.
● See detail on 10-JK2-30.

10-J1-46

LICENSED PROFESSIONAL ENGINEER — LESLIE E. ROBERTSON — No. 34360 — THE STATE OF NEW YORK

WORTHINGTON, SKILLING, HELLE & JACKSON — Civil & Structural Engineers

PROJECT: THE WORLD TRADE CENTER | TITLE: COLUMN SCHEDULE | DATE: 5-15-67

REVISIONS
- 9-20-67
- 11-8-67

J10-51

El. 332'

El. 310'

Street level

El. 294'

14WF87 (Fy=50)

El. 284'

El. 274'

(+) 14WF95 (Fy=50)

El. 264'

(▲) 14WF127 (Fy=50)

El. 253

Top of base Pl at El. 241'

Base Plate — 32 × 3 × 2'-9"

▲ Provide proper splice pls., bolt holes & finished col. top for future columns. Use upper col. one size smaller except as shown.
■ See detail on 10-JK4-3 and 4.
● Splice 3" above slab. See note on 10-JK2-2.
See detail on 10-JK2-30.

10-J1-47

REGISTERED PROFESSIONAL ENGINEER — LESLIE E. ROBERTSON — No. 34360 — STATE OF NEW YORK

WORTHINGTON, SKILLING, HELLE & JACKSON — Civil & Structural Engineers

PROJECT: THE WORLD TRADE CENTER | TITLE: COLUMN SCHEDULE | DATE: 5-15-67

REVISIONS
- 10-20-67
- 11-8-67

	J11-1	J11-2	J11-3	J11-4	J11-5	J11-6	J11-7
El. 332'							
El. 310'	● 14 WF 426 (Fy=50)	● 14 WF 398 (Fy=50)	● 14 WF 398 (Fy=50)	● 14 WF 398 (Fy=50)	● 14 WF 398 (Fy=50)	● 14 WF 398 (Fy=50)	● 14 WF 150 (Fy=50)
El. 294'							
El. 284'							
El. 274'	+ 14 WF 455 (Fy=50)	+ 14 WF 455 (Fy=50)	+ 14 WF 455 (Fy=50)	+ 14 WF 455 (Fy=50)	+ 14 WF 455 (Fy=50)	+ 14 WF 455 (Fy=50)	+ 14 WF 167 (Fy=50)
El. 264'							
El. 253	▲ 14 WF 550 (Fy=50)	▲ 14 WF 500 (Fy=50)	▲ 14 WF 500 (Fy=50)	▲ 14 WF 500 (Fy=50)	▲ 14 WF 500 (Fy=50)	▲ 14 WF 500 (Fy=50)	▲ 14 WF 237 (Fy=50)
Top of base Pl at El. 241'							
Base Plate	$72 \times 8\frac{3}{4} \times 6'\text{-}10"$	$72 \times 8\frac{3}{4} \times 6'\text{-}10"$	$72 \times 8\frac{3}{4} \times 6'\text{-}10"$	$72 \times 8\frac{3}{4} \times 6'\text{-}10"$	$72 \times 8\frac{3}{4} \times 6'\text{-}10"$	$72 \times 8\frac{3}{4} \times 6'\text{-}10"$	$44 \times 4\frac{1}{2} \times 3'\text{-}10"$

* Provide proper splice pls., bolt holes & finished col. top for future columns. Use upper col. one size smaller except as shown.
▲ See detail on 10-JK4-3 and 4.
■ Splice 3" above slab. See note on 10-JK2-2.
● See detail on 10-JK2-30.

10-J1-48

LICENSED PROFESSIONAL ENGINEER — LESLIE E. ROBERTSON — No. 34360 — UNIVERSITY OF THE STATE OF NEW YORK

WORTHINGTON, SKILLING, HELLE & JACKSON — Civil & Structural Engineers

PROJECT: THE WORLD TRADE CENTER | TITLE: COLUMN SCHEDULE | DATE: 5-15-67

REVISIONS
2-20-67
11-8-67

J11-8

El. 332'

El. 310'

14 WF 211 (Fy=50)

El. 294'

El. 284'

El. 274'

14 WF 219 (Fy=50)

El. 264'

14 WF 264 (Fy=50)

El. 253

Top of base Pl at El. 241'

Base Plate — 48 × 5¼ × 4'-4"

* Provide proper splice pls., bolt holes & finished col. top for future columns. Use upper col. one size smaller except as shown.
▲ See detail on 10-JK4-3 and 4.
■ Splice 3" above slab. See note on 10-JK2-2.
● See detail on 10-JK2-30.

10-J1-49

LICENSED PROFESSIONAL ENGINEER — LESLIE E. ROBERTSON — No. 34360 — THE STATE OF NEW YORK

4

PROJECT THE WORLD TRADE CENTER | TITLE COLUMN SCHEDULE | DATE 5-15-67

REVISIONS
10-20-67
11-8-67

	J11-9
El. 332'	
El. 310'	●
	① 14 WF 150 (Fy = 50)
El. 290'	
El. 279'-3"	
	14 WF 158 (Fy = 50)
El. 264'	
	▲ 14 WF 184 (Fy = 50)
El. 253	
Top of Base Pl. at El. 241'	
Base Plate	42 × 4'4 × 3'-8"

* Provide proper splice pls., bolt holes & finished col. top for future columns. Use upper col. one size smaller except as shown.
▲ See detail on 10-JK4-3 and 4.
■ Splice 3" above slab. See note on 10-JK2-2.
● See detail on 10-JK2-30.

10-J1-50

LICENSED PROFESSIONAL ENGINEER LESLIE E. ROBERTSON No. 34360 UNIVERSITY OF THE STATE OF NEW YORK

C

PROJECT THE WORLD TRADE CENTER

TITLE COLUMN SCHEDULE

DATE 5-15-67

REVISIONS

10-20-67

11-8-67

	J12-1	J12-2	J12-3
El. 332'			
El. 310'	*	*	*
El. 294'	14 WF 127 (Fy=50)	14 WF 142 (Fy=50)	14 WF 150 (Fy=50)
El. 284'			
El. 274'	+	+	+
El. 264'	14 WF 150 (Fy=50)	14 WF 150 (Fy=50)	14 WF 167 (Fy=50)
El. 253	▲	▲	▲
Top of base PL at El. 241'	14 WF 219 (Fy=50)	14 WF 228 (Fy=50)	14 WF 246 (Fy=50)
Base Plate	42 × 4'4 × 3'-8"	44 × 4'2 × 3'-10"	50 × 5 × 3'-9"

* Provide proper splice plate, bolt holes & finished col. top for future columns. Use upper col. one size smaller except as shown.
▲ See detail on 10-JK4-3 and 4.
■ Splice 3" above slab. See note on 10-JK2-2.
● See detail on 10-JK2-30.

10-J1-51

LICENSED PROFESSIONAL ENGINEER LESLIE E. ROBERTSON No. 34360 UNIVERSITY OF THE STATE OF NEW YORK

A

WORTHINGTON, SKILLING, HELLE & JACKSON — Civil & Structural Engineers

PROJECT: THE WORLD TRADE CENTER | TITLE: COLUMN SCHEDULE | DATE: 5-15-67

REVISIONS

1-68

	J12-8
El. 332'	
El. 310'	* 14 WF 287 (Fy=50)
El. 290'	
El. 279'3"	
El. 264'	14 WF 550 (Fy=50)
El. 253	▲ 14 WF 550 (Fy=50)
Top of Base Pl. El. 243'4"	
Base Plate	53 × 6¼ × 5'-0"

* Provide proper splice pls., bolt holes & finished col. top for future columns. Use upper col. one size smaller except as shown.
▲ See detail on 10-JK4-3 and 4.
■ Splice 3" above slab. See note on 10-JK2-2.
● See detail on 10-JK2-30.

10-J1-52

LICENSED PROFESSIONAL ENGINEER LESLIE E. ROBERTSON No. 54380 STATE OF NEW YORK

WORTHINGTON, SKILLING, HELLE & JACKSON — Civil & Structural Engineers

PROJECT: THE WORLD TRADE CENTER | TITLE: COLUMN SCHEDULE | DATE: 5-15-67

REVISIONS
- 5-20-67
- 11-8-67
- 1-5-68

	J12-51	J12-52	J12-53	C12-54	C12-55	C12-56	C12-57
El. 332'							
El. 310'		3'-0" * Splice; 12WF58 By others	3'-0" * Splice; 12WF58 By others	12WF58 By others	By others	By others	By others
Street level		El. 306'-9"	El. 307'-4"	El. 309'-10½"	El. 309'-10½"	El. 309'-6"	El. 309'-6"
		See detail on dwg. 10-JK2-31					
El. 294'	14WF87 (Fy=50)						
El. 284'							
El. 274'							
El. 264'	14WF103 (Fy=50)						
El. 253	▲ 14WF127 (Fy=50)						
Top of base Pl at El. 241'							
Base Plate	3B × 3½ × 2'-11"						

* Provide proper splice pls., bolt holes & finished col. top for future columns. Use upper col. one size smaller except as shown
▲ See detail on 10-JK4-3 and 4.
■ Splice 3" above slab. See note on 10-JK2-2.
● See detail on 10-JK2-30.

LICENSED PROFESSIONAL ENGINEER — LESLIE E. ROBERTSON — No. 34360 — OF THE STATE OF NEW YORK — U.S.A.

10-J1-53

WORTHINGTON, SKILLING, HELLE & JACKSON — Civil & Structural Engineers

PROJECT: THE WORLD TRADE CENTER | TITLE: COLUMN SCHEDULE | DATE: 5-15-67

REVISIONS
10-20-67
11-8-67

	J13-1	J13-2	J13-3	J13-4	J13-5	J13-6
El. 332'						
El. 310'	El. 308'-10"					
El. 294'	14 WF 167 (Fy=50)	14 WF 95 (Fy=50)	14 WF 95 (Fy=50)	14 WF 87 (Fy=50)	14 WF 87 (Fy=50)	14 WF 95 (Fy=50)
El. 284'						
El. 274'	⊕ 14 WF 176 (Fy=50)	⊕ 14 WF 111 (Fy=50)	⊕ 14 WF 111 (Fy=50)	⊕ 14 WF 111 (Fy=50)	⊕ 14 WF 103 (Fy=50)	⊕ 14 WF 103 (Fy=50)
El. 264'	▲	▲	▲	▲	▲	▲
El. 253	14 WF 219 (Fy=50)	14 WF 158 (Fy=50)	14 WF 158 (Fy=50)	14 WF 142 (Fy=50)	14 WF 142 (Fy=50)	14 WF 127 (Fy=50)
Top of base Pl at El. 241'						
Base Plate	46 × 4 3/4 × 4'-0"	40 × 3 3/4 × 3'-2"	40 × 3 3/4 × 3'-2"	38 × 3 1/2 × 2'-11"	38 × 3 1/2 × 2'-11"	34 × 3 3/8 × 3'-1"

* Provide proper splice pls., bolt holes & finished col. top for future columns. Use upper col. one size smaller except as shown.
▲ See detail on 10-JK4-3 and 4.
■ Splice 3" above slab. See note on 10-JK2-2.
● See detail on 10-JK2-30.

LICENSED PROFESSIONAL ENGINEER — LESLIE E. ROBERTSON — No. 34360 — UNIVERSITY OF THE STATE OF NEW YORK

10-J1-5

WORTHINGTON, SKILLING, HELLE & JACKSON Civil & Structural Engineers

PROJECT THE WORLD TRADE CENTER | TITLE COLUMN SCHEDULE | DATE 5-15-67

REVISIONS
1-68

	J13-7
El. 332'	
El. 310'	
El. 290'	
El. 279'3"	14 WF 103 (Fy = 50)
El. 264'	
El. 253	Temp bracing ▲
Top of Base Pl. El. 241'	14 WF 103 (Fy = 50)
Base Plate	33 x 3⅛ x 2'-11"

✱ Provide proper splice pls., bolt holes & finished col. top for future columns. Use upper col. one size smaller except as shown.
▲ See detail on 10-JK4-3 and 4.
■ Splice 3" above slab. See note on 10-JK2-2.
● See detail on 10-JK2-30.

10-J1-55

WORTHINGTON, SKILLING, HELLE & JACKSON — Civil & Structural Engineers

PROJECT: THE WORLD TRADE CENTER | TITLE: COLUMN SCHEDULE | DATE: 5-15-67

REVISIONS
10-20-67
11-8-67

	J14-1	J14-2	J14-3	J14-4	J14-5	J14-6
El. 332'						
El. 310'						
Street level						
El. 294'	14 WF 103 (Fy=50)		14 WF 150 (Fy=50)	14 WF 142 (Fy=50)	14 WF 211 (Fy=50)	14 WF 61 (Fy=50)
El. 284'						
El. 274'	14 WF 103 (Fy=50)	14 WF 74 (Fy=50)	14 WF 176 (Fy=50)	14 WF 167 (Fy=50)	14 WF 228 (Fy=50)	14 WF 74 (Fy=50)
El. 264'	▲	▲	▲	▲	▲	▲
El. 253	14 WF 119 (Fy=50)	14 WF 111 (Fy=50)	14 WF 264 (Fy=50)	14 WF 246 (Fy=50)	14 WF 320 (Fy=50)	14 WF 111 (Fy=50)
Top of base Pl at El. 241'						
Base Plate	32 × 3 × 2'-9"	32 × 3 × 2'-9"	48 × 5¼ × 4'-4"	48 × 5¼ × 4'-2"	50 × 5 × 4'-0"	32 × 3 × 2'-9"

* Provide proper splice pls., bolt holes & finished col. top for future columns. Use upper col. one size smaller except as shown.
▲ See detail on 10-JK4-3 and 4.
■ Splice 3" above slab. See note on 10-JK2-2.
● See detail on 10-JK2-30.

10-J1-56

LICENSED PROFESSIONAL ENGINEER — LESLIE E. ROBERTSON — No. 34360 — UNIVERSITY OF THE STATE OF NEW YORK

A

WORTHINGTON, SKILLING, HELLE & JACKSON Civil & Structural Engineers

PROJECT THE WORLD TRADE CENTER | TITLE COLUMN SCHEDULE | DATE 5-15-67

REVISIONS
- 1-68
6-7-68
1-13-69

J14-7

El. 332'

14WF119 (Fy=50)

El. 310'

14WF119 (Fy=50)

El. 290'

El. 279'-3"

El. 264'

El. 253'

14WF184 (Fy=50)

Top of Base Pl. El. 241'

Base Plate 42 x 4⅝ x 3'-8"

* Provide proper splice pls., bolt holes & finished col. top for future columns. Use upper col. one size smaller except as shown.
▲ See detail on 10-JK4-3 and 4.
■ Splice 3" above slab. See note on 10-JK2-2.
● See detail on 10-JK2-30.

LICENSED PROFESSIONAL ENGINEER LESLIE E. ROBERTSON No. 54380 STATE OF NEW YORK

DRAWN S.C.
REVIEWED R.T. & E.L.

10-J1-57

C

WORTHINGTON, SKILLING, HELLE & JACKSON Civil & Structural Engineers

PROJECT THE WORLD TRADE CENTER | TITLE COLUMN SCHEDULE | DATE 5-15-67

REVISIONS

·13-69

	J14-8	J14-9	J14-10	J14-11	J14-12		
El. 332'							
El. 310'	14 WF 193 (Fy:50)	14 WF 264 (Fy:50)	14 WF 202 (Fy:50)	14 WF 202 (Fy:50)	14 WF 264 (Fy:50)		
El. 290'							
El. 279'3"							
El. 264'							
El. 253							
Top of Base Pl.							
Base Plate							

* Provide proper splice pls., bolt holes & finished col. top for future columns. Use upper col. one size smaller except as shown.
▲ See detail on 10-JK4-3 and 4.
■ Splice 3" above slab. See note on 10-JK2-2.
● See detail on 10-JK2-30.

LICENSED PROFESSIONAL ENGINEER LESLIE E. ROBERTSON No. 34960 STATE OF NEW YORK

DRAWN S.C.

REVIEWED R.T. & E.L.

10-J1-58

WORTHINGTON, SKILLING, HELLE & JACKSON — Civil & Structural Engineers

PROJECT: THE WORLD TRADE CENTER | TITLE: COLUMN SCHEDULE | DATE: 5-15-67

REVISIONS
10-20-67
11-8-67

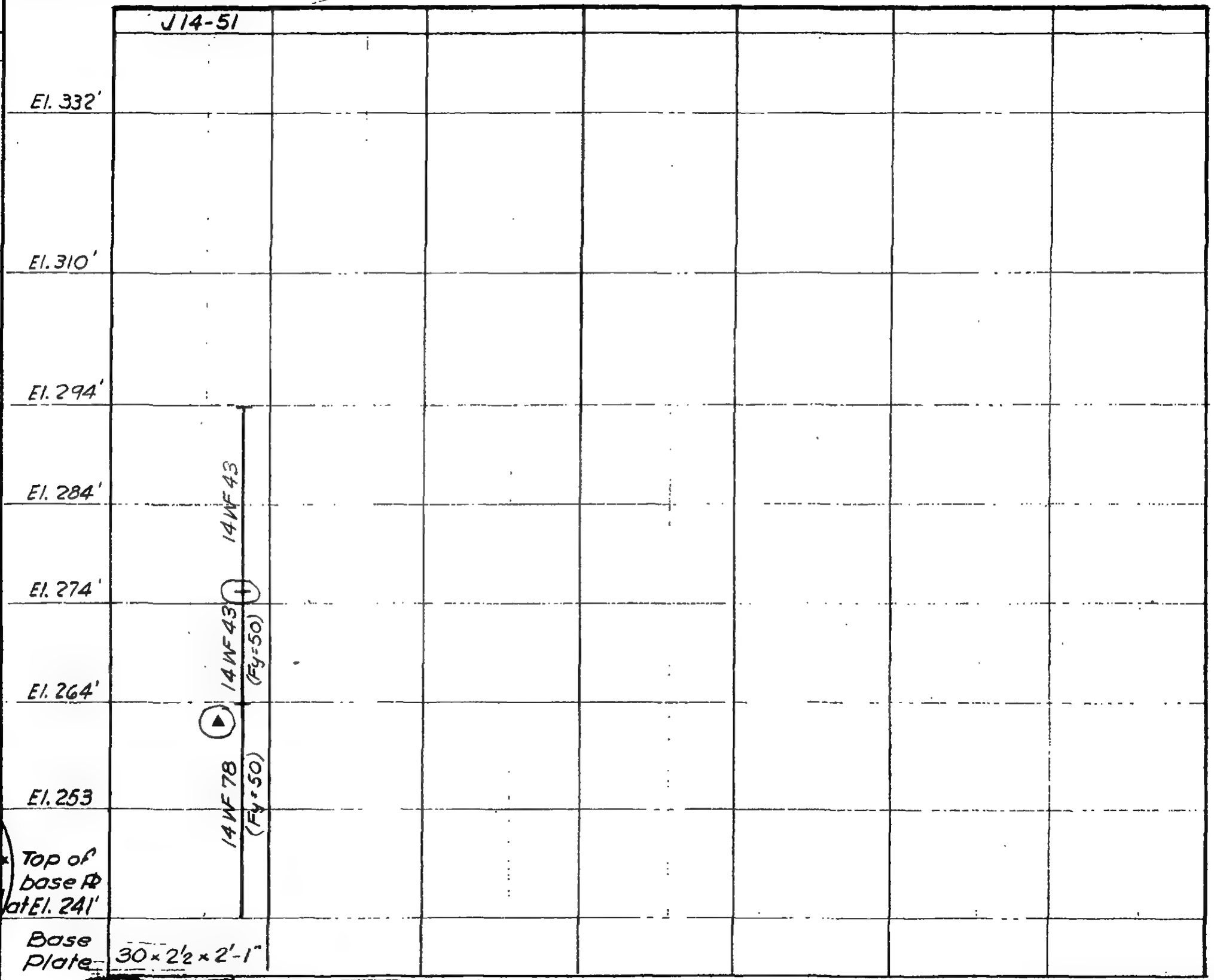

* Provide proper splice pls., bolt holes & finished col. top for future columns. Use upper col. one size smaller except as shown.
▲ See detail on 10-JK4-3 and 4.
■ Splice 3" above slab. See note on 10-JK2-2.
● See detail on 10-JK2-30.

10-J1-59

LICENSED PROFESSIONAL ENGINEER — LESLIE E. ROBERTSON — No. 34360 — UNIVERSITY OF THE STATE OF NEW YORK

A

WORTHINGTON, SKILLING, HELLE & JACKSON — CIVIL & STRUCTURAL ENGINEERS

PROJECT: THE WORLD TRADE CENTER | TITLE: COLUMN SCHEDULE | DATE: 5-15-67

REVISIONS
10-20-67
11-8-67

	J15-1	J15-2	J15-3	J15-4	J15-5
El. 332'					
El. 310'					
Street level					
El. 294'	14 WF 68 (Fy=50)	14 WF 111 (Fy=50)	14 WF 136 (Fy=50)	14 WF 167 (Fy=50)	14 WF 87 (Fy=50)
El. 284'					
El. 274'	14 WF 84 (Fy=50)	14 WF 142 (Fy=50)	14 WF 167 (Fy=50)	14 WF 202 (Fy=50)	14 WF 111 (Fy=50)
El. 264'	▲	▲	▲	▲	▲
El. 253	14 WF 127 (Fy=50)	14 WF 219 (Fy=50)	14 WF 237 (Fy=50)	14 WF 314 (Fy=50)	14 WF 158 (Fy=50)
Top of base Pl at El. 241'					
Base Plate	34 × 3 3/8 × 3'-1"	46 × 4 3/4 × 4'-2"	46 × 4 7/8 × 4'-1"	54 × 5 1/2 × 4'-3"	38 × 3 3/4 × 3'-4"

LICENSED PROFESSIONAL ENGINEER — LESLIE E. ROBERTSON — No. 34360 — UNIVERSITY OF THE STATE OF NEW YORK

* Provide proper splice pls., bolt holes & finished col. top for future columns. Use upper col. one size smaller except as shown.
▲ See detail on 10-JK4-3 and 4.
■ Splice 3" above slab. See note on 10-JK2-2.
● See detail on 10-JK2-30.

10-31-60

A

WORTHINGTON, SKILLING, HELLE & JACKSON Civil & Structural Engineers

PROJECT THE WORLD TRADE CENTER | TITLE COLUMN SCHEDULE | DATE 5-15-67

REVISIONS

10-20-67

11-8-67

	J15-51
El. 332'	
El. 310'	
El. 294'	
El. 284'	14WF43
El. 274'	①
El. 264'	14WF43 (Fy=50)
El. 253	▲ 14WF78 (Fy=50)
Top of base Pl at El. 241'	
Base Plate	30 × 2½ × 2'-1"

* Provide proper splice pls., bolt holes & finished col. top for future columns. Use upper col. one size smaller except as shown.
▲ See detail on 10-JK4-3 and 4.
■ Splice 3" above slab. See note on 10-JK2-2.
● See detail on 10-JK2-30.

10-J1-61

LICENSED PROFESSIONAL ENGINEER LESLIE E. ROBERTSON No. 34360 UNIVERSITY OF THE STATE OF NEW YORK

A

PROJECT THE WORLD TRADE CENTER | TITLE COLUMN SCHEDULE | DATE 5-15-67

REVISIONS

1-13-69

	J16-1	J16-2	J16-3	J16-4			
El. 332'							
El. 310'	14 WF 264 (Fy=50)	14 WF 202 (Fy=50)	14 WF 202 (Fy=50)	14 WF 264 (Fy=50)			
El. 290'							
El. 279'-3"							
El. 264'							
El. 253							
Top of Base Pl. El.							
Base Plate							

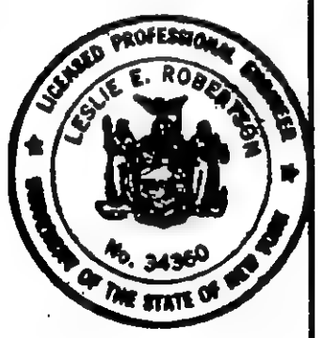

DRAWN S.C.

REVIEWED R.T. & E.L.

C

* Provide proper splice pls., bolt holes & finished col. top for future columns. Use upper col. one size smaller except as shown.
▲ See detail on 10-JK4-3 and 4.
■ Splice 3" above slab. See note on 10-JK2-2.
● See detail on 10-JK2-30.

10-J1-62

WORTHINGTON, SKILLING, HELLE & JACKSON — Civil & Structural Engineers

PROJECT: THE WORLD TRADE CENTER | TITLE: COLUMN SCHEDULE | DATE: 5-15-67

REVISIONS

1-13-69

	J16-51						
El. 332'							
El. 310'	14 WF 87 (Fy-50)						
El. 290'							
El. 279'-3"							
El. 264'							
El. 253							
Top of Base Pl.							
Base Plate							

* Provide proper splice pls., bolt holes & finished col. top for future columns. Use upper col. one size smaller except as shown.
▲ See detail on 10-JK4-3 and 4.
■ Splice 3" above slab. See note on 10-JK2-2.
● See detail on 10-JK2-30.

LICENSED PROFESSIONAL ENGINEER — LESLIE E. ROBERTSON — No. 34360 — THE STATE OF NEW YORK

DRAWN S.C.

REVIEWED R.T. & E.L.

10-11-63

C

WORTHINGTON, SKILLING, HELLE & JACKSON — Civil & Structural Engineers

PROJECT: THE WORLD TRADE CENTER | TITLE: COLUMN SCHEDULE | DATE: 5-15-67

REVISIONS
10-20-67
11-8-67

	J17-1	J17-2	J17-3	J17-4	J17-5
El. 332'					
El. 310'					
Street level					
El. 294'	14 WF 68 (Fy=50)	14 WF 111 (Fy=50)	14 WF 111 (Fy=50)	14 WF 167 (Fy=50)	14 WF 87 (Fy=50)
El. 284'					
El. 274'	14 WF 78 (Fy=50)	14 WF 136 (Fy=50)	14 WF 142 (Fy=50)	14 WF 202 (Fy=50)	14 WF 111 (Fy=50)
El. 264'					
El. 253	14 WF 119 (Fy=50)	14 WF 202 (Fy=50)	14 WF 211 (Fy=50)	14 WF 314 (Fy=50)	14 WF 158 (Fy=50)
Top of base Pl at El. 241'					
Base plate	28 × 2 5/8 × 2'-4"	42 × 4 1/4 × 3'-8"	42 × 4 1/4 × 3'-10"	54 × 5 1/2 × 4'-3"	38 × 3 3/4 × 3'-4"

* Provide proper splice pls., bolt holes & finished col. top for future columns. Use upper col. one size smaller except as shown.
▲ See detail on 10-JK4-3 and 4.
■ Splice 3" above slab. See note on 10-JK2-2.
● See detail on 10-JK2-30.

10-J1-64

LICENSED PROFESSIONAL ENGINEER — LESLIE E. ROBERTSON — No. 34360 — UNIVERSITY OF THE STATE OF NEW YORK

A

WORTHINGTON, SKILLING, HELLE & JACKSON — Civil & Structural Engineers

PROJECT: THE WORLD TRADE CENTER | TITLE: COLUMN SCHEDULE | DATE: 5-15-67

REVISIONS

)-20-67

11-8-67

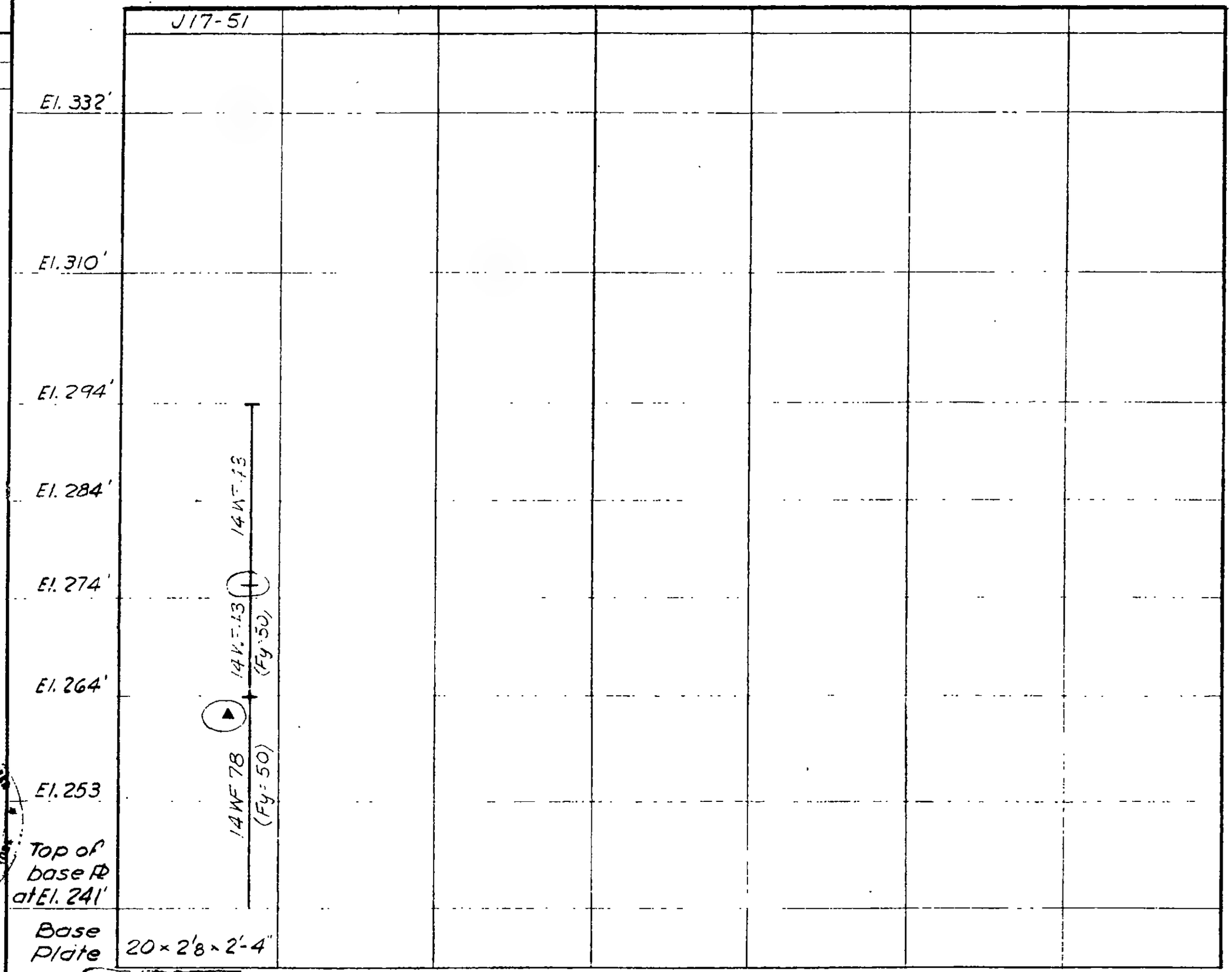

✱ Provide proper splice pls. [illegible] bolts [illegible] col. to [illegible] columns. Use upper col. [illegible] size smaller except as [illegible]
▲ See detail on [illegible]
■ Splice 3" above slab. See note on [illegible]
● See detail on [illegible]

10-J1-65

LICENSED PROFESSIONAL ENGINEER LESLIE E. ROBERTSON No. 34360 UNIVERSITY OF THE STATE OF NEW YORK

A

PROJECT THE WORLD TRADE CENTER

TITLE COLUMN SCHEDULE

DATE 5-15-67

REVISIONS

1-13-69

	J18-1	J18-2	J18-3	J18-4			
El. 332'							
El. 310'	14 WF 228 (Fy=50)	14 WF 84 (Fy=50)	14 WF 84 (Fy=50)	14 WF 228 (Fy=50)			
El. 290'							
El. 279'3"							
El. 264'							
El. 253							
Top of Base Pl.							
Base Plate							

✱ Provide proper splice pls., bolt holes & finished col. top for future columns. Use upper col. one size smaller except as shown.
▲ See detail on 10-JK4-3 and 4.
■ Splice 3" above slab. See note on 10-JK2-2.
● See detail on 10-JK2-30.

DRAWN S.C

REVIEWED R.T. & E.L.

10-J1-66

C

WORTHINGTON, SKILLING, HELLE & JACKSON — Civil & Structural Engineers

PROJECT: THE WORLD TRADE CENTER | TITLE: COLUMN SCHEDULE | DATE: 5-15-67

REVISIONS
1-13-69

	J18-51
El. 332'	
El. 310'	14WF87 (Fy=50)
El. 290'	
El. 279'-3"	
El. 264'	
El. 253	
Top of Base Pl.	
Base Plate	

* Provide proper splice pls., bolt holes & finished col. top for future columns. Use upper col. one size smaller except as shown.
▲ See detail on 10-JK4-3 and 4.
■ Splice 3" above slab. See note on 10-JK2-2.
● See detail on 10-JK2-30.

LICENSED PROFESSIONAL ENGINEER — LESLIE E. ROBERTSON — No. 34360 — STATE OF NEW YORK

DRAWN S.C.
REVIEWED R.T. & E.L.

10-J1-67

C

WORTHINGTON, SKILLING, HELLE & JACKSON — Civil & Structural Engineers

PROJECT: THE WORLD TRADE CENTER | TITLE: COLUMN SCHEDULE | DATE: 5-15-67

REVISIONS
- 10-20-67
- 11-8-67

	J19-1	J19-2	J19-3	J19-4	J19-5
El. 332'					
El. 310'					
Street level					
El. 294'	14 WF 61 (Fy=50)	14 WF 87 (Fy=50)	14 WF 119 (Fy=50)	14 WF 167 (Fy=50)	14 WF 87 (Fy=50)
El. 284'					
El. 274'					
El. 264'	14 WF 68 (Fy=50)	14 WF 111 (Fy=50)	14 WF 142 (Fy=50)	14 WF 202 (Fy=50)	14 WF 103 (Fy=50)
El. 253					
Top of base Pl at El. 241'	14 WF 95 (Fy=50)	14 WF 158 (Fy=50)	14 WF 219 (Fy=50)	14 WF 314 (Fy=50)	14 WF 150 (Fy=50)
Base Plate	32 × 2 3/4 × 2'-5"	38 × 3 3/4 × 3'-4"	46 × 4 3/4 × 4'-2"	48 × 5 1/4 × 4'-4"	38 × 3 7/8 × 3'-5"

* Provide proper splice pls., bolt holes & finished col. top for future columns. Use upper col. one size smaller except as shown.
▲ See detail on 10-JK4-3 and 4.
■ Stake 3" above slab. See note on 10-JK2-2.
● See detail on 10-JK2-30.

10-J1-68

LICENSED PROFESSIONAL ENGINEER — LESLIE E. ROBERTSON — No. 34360 — UNIVERSITY OF THE STATE OF NEW YORK

A

WORTHINGTON, SKILLING, HELLE & JACKSON — Civil & Structural Engineers

PROJECT: THE WORLD TRADE CENTER | TITLE: COLUMN SCHEDULE | DATE: 5-15-67

REVISIONS
10-20-67
11-8-67

	J19-51
El. 332'	
El. 310'	
El. 294'	
El. 284'	14WF43
El. 274'	⊕
El. 264'	14WF43 (Fy=50)
El. 253	▲ 14WF78 (Fy=50)
Top of base Pl at El. 241'	
Base Plate	30 × 2½ × 2'-1"

* Provide proper splice pls., bolt holes & finished col. top for future columns. Use upper col. one size smaller except as shown.
▲ See detail on 10-JK4-3 and 4.
■ Splice 3" above slab. See note on 10-JK2-2.
● See detail on 10-JK2-30.

LICENSED PROFESSIONAL ENGINEER
LESLIE E. ROBERTSON
No. 34360
UNIVERSITY OF THE STATE OF NEW YORK

10-11-69

A

WORTHINGTON, SKILLING, HELLE & JACKSON — Civil & Structural Engineers

PROJECT: THE WORLD TRADE CENTER | TITLE: COLUMN SCHEDULE | DATE: 5-15-67

REVISIONS
1-13-69

	J20-1	J20-2	J20-3	J20-4			
El. 332'							
El. 310'	14 WF 228 (Fy=50)	14 WF 87 (Fy=50)	14 WF 87 (Fy=50)	14 WF 228 (Fy=50)			
El. 290'							
El. 279'-3"							
El. 264'							
El. 253							
Top of Base Pl.							
Base Plate							

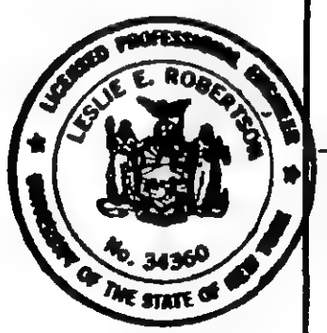

* Provide proper splice pls., bolt holes & finished col. top for future columns. Use upper col. one size smaller except as shown.
▲ See detail on 10-JK4-3 and 4.
■ Splice 3" above slab. See note on 10-JK2-2.
● See detail on 10-JK2-30.

DRAWN S.C.
REVIEWED R.T. & E.L.

10-J1-70

C

PROJECT THE WORLD TRADE CENTER | TITLE COLUMN SCHEDULE | DATE 5-15-67

REVISIONS
1-13-69

	J20-51
El. 332'	
El. 310'	14 WF 87 (Fy=50)
El. 290'	
El. 279'3"	
El. 264'	
El. 253	
Top of Base Pl.	
Base Plate	

* Provide proper splice pls., bolt holes & finished col. top for future columns. Use upper col. one size smaller except as shown.
▲ See detail on 10-JK4-3 and 4.
■ Splice 3" above slab. See note on 10-JK2-2.
● See detail on 10-JK2-30.

LICENSED PROFESSIONAL ENGINEER — LESLIE E. ROBERTSON — No. 34360 — STATE OF NEW YORK

DRAWN S.C.
REVIEWED R.T. & E.L.

10-JI-71

C

WORTHINGTON, SKILLING, HELLE & JACKSON — Civil & Structural Engineers

PROJECT: THE WORLD TRADE CENTER | TITLE: COLUMN SCHEDULE | DATE: 5-15-67

REVISIONS
10-20-67
11-8-67

	J21-1	J21-2	J21-3	J21-4
El. 332'				
El. 310'				
Street level				
El. 294'	14 WF 74 (Fy=50)	14 WF 127 (Fy=50)	14 WF 158 (Fy=50)	14 WF 84 (Fy=50)
El. 284'				
El. 274'	⊕ 14 WF 87 (Fy=50)	⊕ 14 WF 167 (Fy=50)	⊕ 14 WF 184 (Fy=50)	⊕ 14 WF 95 (Fy=50)
El. 264'				
El. 253	▲ 14 WF 127 (Fy=50)	▲ 14 WF 237 (Fy=50)	▲ 14 WF 287 (Fy=50)	▲ 14 WF 142 (Fy=50)
Top of base Pl at El. 241'				
Base Plate	34 × 3 3/8 × 3'-1"	46 × 4 7/8 × 4'-1"	48 × 5 1/4 × 4'-4"	38 × 3 3/4 × 3'-4"

* Provide upper splice pls., bolt holes & finished col. top for future columns. Use upper col. one size smaller except as shown.
▲ See detail on 10-JK4-3 and 4.
■ Splice 3" above slab. See note on 10-JK2-2.
● See detail on 10-JK2-30.

10-J1-72

REGISTERED PROFESSIONAL ENGINEER LESLIE E. ROBERTSON No. 34360 UNIVERSITY OF THE STATE OF NEW YORK

A

WORTHINGTON, SKILLING, HELLE & JACKSON — Civil & Structural Engineers

PROJECT: THE WORLD TRADE CENTER | TITLE: COLUMN SCHEDULE | DATE: 5-15-67

REVISIONS
10-20-67
11-8-67

	J21-51
El. 332'	
El. 310'	
El. 294'	
El. 284'	14 WF 43
El. 274'	14 WF 43 (FY=50) ①
El. 264'	▲
El. 253	14 WF 78 (FY=50)
Top of base Pl at El. 241'	
Base Plate	30 × 2½ × 2'-1"

* Provide proper splice pls., bolt holes & finished col. top for future columns. Use upper col. one size smaller except as shown.
▲ See detail on 10-JK4-3 and 4.
■ Splice 3" above slab. See note on 10-JK2-2.
● See detail on 10-JK2-30.

10-J1-73

LICENSED PROFESSIONAL ENGINEER
LESLIE E. ROBERTSON
No. 34960
UNIVERSITY OF THE STATE OF NEW YORK

A

PROJECT THE WORLD TRADE CENTER | TITLE COLUMN SCHEDULE | DATE 5-15-67

REVISIONS

1-13-69

	J22-1	J22-2					
El. 332'							
El. 310'	14 WF 87 (Fy: 50)	14 WF 228 (Fy: 50)					
El. 290'							
El. 279'-3"							
El. 264'							
El. 253							
Top of Base Pl.							
Base Plate							

LICENSED PROFESSIONAL ENGINEER — LESLIE E. ROBERTSON — No. 34360 — REGISTERED OF THE STATE OF NEW YORK

DRAWN S.C.

REVIEWED R.T. & E.L.

C

* Provide proper splice pls., bolt holes & finished col. top for future columns. Use upper col. one size smaller except as shown.
▲ See detail on 10-JK4-3 and 4.
■ Splice 3" above slab. See note on 10-JK2-2.
● See detail on 10-JK2-30.

10-J1-74

WORTHINGTON, SKILLING, HELLE & JACKSON — Civil & Structural Engineers

PROJECT: THE WORLD TRADE CENTER | TITLE: COLUMN SCHEDULE | DATE: 5-15-67

REVISIONS
- 10-20-67
- 11-8-67
- 1-13-69

	J23-1	J23-2	J23-3	J23-4	J23-5	J23-6	J23-7
El. 332'					14 WF 87 (Fy=50)	14 WF 228 (Fy=50)	14 WF 111 (Fy=50)
El. 310'							
Street level							
El. 294'	14 WF 68 (Fy=50)	14 WF 119 (Fy=50)	14 WF 167 (Fy=50)	14 WF 87 (Fy=50)			
El. 284'							
El. 274'							
El. 264'	14 WF 74 (Fy=50)	14 WF 142 (Fy=50)	14 WF 202 (Fy=50)	14 WF 111 (Fy=50)			
El. 253	▲ 14 WF 103 (Fy=50)	▲ 14 WF 219 (Fy=50)	▲ 14 WF 314 (Fy=50)	▲ 14 WF 158 (Fy=50)			
Top of base Pl at El. 241'							
Base Plate	32 × 3 × 2'-9"	46 × 4¾ × 4'-2"	54 × 5½ × 4'-3"	38 × 3¾ × 3'-4"			

* Provide proper splice pls., bolt holes & finished col. top for future columns. Use upper col. one size smaller except as shown.
▲ See detail on 10-JK4-3 and 4.
■ Splice 3" above slab. See note on 10-JK2-2.
● See detail on 10-JK2-30.

LICENSED PROFESSIONAL ENGINEER — LESLIE E. ROBERTSON — No. 34960 — STATE OF NEW YORK

DRAWN S.C.
REVIEWED R.T. & E.L.

10-J1-75

A

WORTHINGTON, SKILLING, HELLE & JACKSON — Civil & Structural Engineers

PROJECT: THE WORLD TRADE CENTER | TITLE: COLUMN SCHEDULE | DATE: 5-15-67

REVISIONS
10-20-67
11-8-67

	J23-51
El. 332'	
El. 310'	
El. 294'	
El. 284'	14WF43
El. 274'	①
El. 264'	14WF43 (Fy=50)
El. 253	▲ 14WF78 (Fy=50)
Top of base Pl at El. 241'	
Base Plate	30×2½×2'-1"

* Provide proper splice pls., bolt holes & finished col. top for future columns. Use upper col. one size smaller except as shown.
▲ See detail on 10-JK4-3 and 4.
■ Splice 3" above slab. See note on 10-JK2-2.
● See detail on 10-JK2-30.

LESLIE E. ROBERTSON No. 34360 UNIVERSITY OF THE STATE OF NEW YORK

10-J1-76

A

WORTHINGTON, SKILLING, HELLE & JACKSON — Civil & Structural Engineers

PROJECT: THE WORLD TRADE CENTER | TITLE: COLUMN SCHEDULE | DATE: 5-15-67

REVISIONS
10-20-67
11-8-67

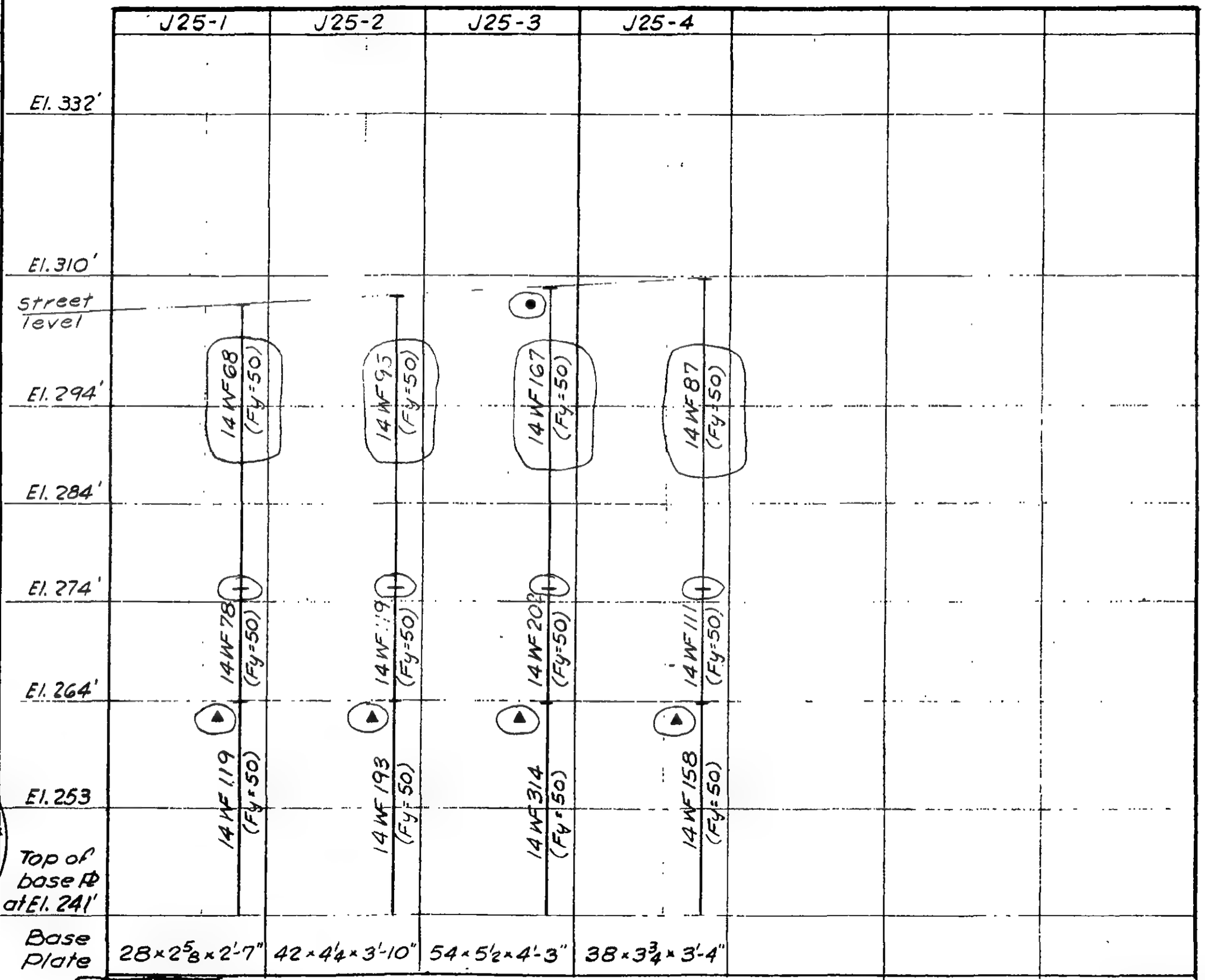

* Provide proper splice pls., bolt holes & finished col. top for future columns. Use upper col. one size smaller except as shown.
▲ See detail on 10-JK4-3 and 4.
■ Splice 3" above slab. See note on 10-JK2-2.
● See detail on 10-JK2-30.

10-31-77

LICENSED PROFESSIONAL ENGINEER — LESLIE E. ROBERTSON — No. 34360 — UNIVERSITY OF THE STATE OF NEW YORK

A

WORTHINGTON, SKILLING, HELLE & JACKSON — Civil & Structural Engineers

PROJECT: THE WORLD TRADE CENTER | TITLE: COLUMN SCHEDULE | DATE: 5-15-67

REVISIONS
10-20-67
11-8-67

	J25-51
El. 332'	
El. 310'	
El. 294'	
El. 284'	14 WF 53 (Fy=50)
El. 274'	
El. 264'	14 WF 68 (Fy=50) ▲
El. 253	14 WF 95 (Fy=50)
Top of base Pl at El. 241'	
Base Plate	26 × 2⅝ × 2'-7"

* Provide proper splice pls., bolt holes & finished col. top for future columns. Use upper col. one size smaller except as shown.
▲ See detail on 10-JK4-3 and 4.
■ Splice 3" above slab. See note on 10-JK2-1.
● See detail on 10-JK2-30.

10-31-78

LICENSED PROFESSIONAL ENGINEER — LESLIE E. ROBERTSON — No. 34360 — UNIVERSITY OF THE STATE OF NEW YORK

A

WORTHINGTON, SKILLING, HELLE & JACKSON — Civil & Structural Engineers

PROJECT: THE WORLD TRADE CENTER | TITLE: COLUMN SCHEDULE | DATE: 5-15-67

REVISIONS

5-1-68

	J70-1	J70-2
El. 332'		
El. 310'		
El. 290'	14WF142 (Fy=50)	14WF136 (Fy=50)
El. 279'-3"		
El. 264'	14WF370 (Fy=50) ▲	14WF314 (Fy=50) ▲
El. 253	14WF370 (Fy=50)	14WF314 (Fy=50)
Top of Base Pl.	El. 241'	El. 241'
Base Plate	47 × 5¼ × 4'-2"	42 × 4⅝ × 3'-9"

✱ Provide proper splice pls., bolt holes & finished col. top for future columns. Use upper col. one size smaller except as shown.
▲ See detail on 10-JK4-3 and 4.
■ Splice 3" above slab. See note on 10-JK2-2.
● See detail on 10-JK2-30.

LICENSED PROFESSIONAL ENGINEER — LESLIE E. ROBERTSON — No. 34360 — UNIVERSITY OF THE STATE OF NEW YORK

10-31-79

WORTHINGTON, SKILLING, HELLE & JACKSON — Civil & Structural Engineers

PROJECT: THE WORLD TRADE CENTER | TITLE: COLUMN SCHEDULE | DATE: 5-15-67

REVISIONS

5-1-68

	J70-51	J70-52	J70-53
El. 332'			
El. 310'			
El. 290'	14 WF 87 (Fy=50)	14 WF 119 (Fy=50)	14 WF 95 (Fy=50)
El. 279'-3"			
El. 264'	14 WF 228 (Fy=50)	14 WF 314 (Fy=50)	14 WF 237 (Fy=50)
El. 253	▲ 14 WF 228 (Fy=50)	▲ 14 WF 314 (Fy=50)	▲ 14 WF 237 (Fy=50)
Top of Base Pl.	El. 241'	El. 241'	El. 241'
Base Plate	36 × 3 3/8 × 3'-2"	41 × 4 1/2 × 3'-8"	36 × 3 3/8 × 3'-2"

* Provide proper splice pls., bolt holes & finished col. top for future columns. Use upper col. one size smaller except as shown.
▲ See detail on 10-JK4-3 and 4.
■ Splice 3" above slab. See note on 10-JK2-2.
● See detail on 10-JK2-30.

LICENSED PROFESSIONAL ENGINEER LESLIE E. ROBERTSON No. 34360 UNIVERSITY OF THE STATE OF NEW YORK

10-J1-80

WORTHINGTON, SKILLING, HELLE & JACKSON — Civil & Structural Engineers

PROJECT: THE WORLD TRADE CENTER | TITLE: COLUMN SCHEDULE | DATE: 5-15-67

REVISIONS
5-1-68

	J71-1	J71-2	J71-3	J71-4	J71-5	J71-6	J71-7
El. 332'							
El. 310'							
El. 290'		14WF111 (Fy=50)	14WF127 (Fy=50)	14WF127 (Fy=50)	14WF136 (Fy=50)	14WF176 (Fy=50)	14WF167 (Fy=50)
El. 279'-3"							
El. 264'		14WF314 (Fy=50)	14WF342 (Fy=50)	14WF314 (Fy=50)	14WF342 (Fy=50)	14WF426 (Fy=50)	14WF398 (Fy=50)
El. 253	14WF61 (Fy=42)	▲ 14WF314 (Fy=50)	▲ 14WF342 (Fy=50)	▲ 14WF314 (Fy=50)	▲ 14WF342 (Fy=50)	▲ 14WF426 (Fy=50)	▲ 14WF398 (Fy=50)
Top of Base Pl.	El. 241'	El. 241'	El. 241'	El. 241'	El. 241'	El. 241'	El. 241'
Base Plate	20 × 1¾ × 2'-0"	40 × 4 × 3'-7"	44 × 4⅞ × 3'-10"	42 × 4⅝ × 3'-9"	44 × 5 × 3'-11"	50 × 5⅝ × 4'-5"	48 × 5⅝ × 4'-4"

✱ Provide proper splice pls., bolt holes & finished col. top for future columns. Use upper col. one size smaller except as shown.
▲ See detail on 10-JK4-3 and 4.
■ Splice 3" above slab. See note on 10-JK2-2.
● See detail on 10-JK2-30.

LICENSED PROFESSIONAL ENGINEER — LESLIE E. ROBERTSON — No. 84360 — UNIVERSITY OF THE STATE OF NEW YORK

10-J1-81

WORTHINGTON, SKILLING, HELLE & JACKSON — Civil & Structural Engineers

PROJECT: THE WORLD TRADE CENTER | TITLE: COLUMN SCHEDULE | DATE: 5-15-67

REVISIONS
5-1-68
6-28-68

	J72-1	J72-2
El. 332'		
El. 310'	Part of Truss JT-9	Part of Truss JT-10
El. 290'		
El. 274'	Part of Truss JT-8 See dwg. / 14 WF 342 (Fy=50)	14 WF 665 (Fy=46)
El. 264'		
Top of base Pl.	14 WF 665 (Fy=46) El. 243'-4"	10-JK4-48 / 14 WF 665 (Fy=46) El. 243'-4"
Base Plate	69 × 8½ × 6'-4"	64 × 7¾ × 5'-10"

LICENSED PROFESSIONAL ENGINEER LESLIE E. ROBERTSON No. 34360 UNIVERSITY OF THE STATE OF NEW YORK

* Provide proper splice pls., bolt holes & finished col. top for future columns. Use upper col. one size smaller except as shown.
▲ See detail on 10-JK4-3 and 4..
■ Splice 3" above slab. See note on 10-JK2-2.
● See detail on 10-JK2-30.

10-J1-83

WORTHINGTON, SKILLING, HELLE & JACKSON — Civil & Structural Engineers

PROJECT: THE WORLD TRADE CENTER | TITLE: COLUMN SCHEDULE | DATE: 5-15-67

REVISIONS
5-1-68
6-7-68
10-15-68

	J72-4	J72-5	J72-6	J72-7
El. 332'				
El. 310'				
El. 290'	#2-Girder 14 WF 264 (Fy=50)	14 WF 228 (Fy=50)	14 WF 237 (Fy=50)	14 WF 211 (Fy=50)
El. 279'-3"				Det. 1 / 10-JK2-41
El. 264'	14 WF 550 (Fy=50)	Temp. bracing ⊗	Temp. bracing ⊗	Temp. bracing 20×12 I 2 PL 3/4 × 12 × 2 3/4 1 PL 1 1/2 × 14 1/2 × 1 1/2 (Fy=50)
El. 253	▲			See detail on 10-JK2-35B
Top of Base Pl.	14 WF 550 (Fy=50) El. 243'-4"	20×12 II 2 PL 3/4 × 12 × 5 2 PL 3/4 × 10 × 4 (Fy=50) El. 243'-4"	20×12 II 2 PL 3/4 × 12 × 5 2 PL 3/4 × 10 × 4 (Fy=50) El. 243'-4"	14 WF 342 (Fy=50) El. 243'-4"
Base Plate	57×7×5'-2"	53×7×5'-0"	57×7×5'-1"	53×6 1/4×4'-9"

LICENSED PROFESSIONAL ENGINEER — LESLIE E. ROBERTSON — No. 54280 — UNIVERSITY OF THE STATE OF NEW YORK

✱ Provide proper splice pls., bolt holes & finished col. top for future columns. Use upper col. one size smaller except as shown.
▲ See detail on 10-JK4-3 and 4.
■ Splice 3" above slab. See note on 10-JK2-2.
● See detail on 10-JK2-30.
⊗ Splice detail, see 10-JK2-35A

10-J1-84

WORTHINGTON, SKILLING, HELLE & JACKSON — Civil & Structural Engineers

PROJECT: THE WORLD TRADE CENTER | TITLE: COLUMN SCHEDULE | DATE: 5-15-67

REVISIONS
5-1-68
6-7-68

	J72-8	J72-9	J72-10	J72-11	J72-12		
El. 332'							
El. 310'							
El. 290'	Det. 1 / 10-JK2-41 — 14 WF 211 (Fy=50)	Det. 2 / 10-JK2-41 — 14 WF 219 (Fy=50)	Det. 3 / 10-JK2-41 — 14 WF 167 (Fy=50)	Det. 2 / 10-JK2-41 — 14 WF 219 (Fy=50)	Det. 4 / 10-JK2-41 — 14 WF 142 (Fy=50)		
El. 279'-3"	Temp. bracing — 20 x 12 I, 2 PL 12 x 2¾, 1 PL 14½ x 1½ (Fy=50)	Temp. bracing — 20 x 12 I, 2 PL 12 x 2¾, 1 PL 14½ x 1½ (Fy=50)	Temp. bracing — 20 x 12 I, 2 PL 12 x 2½, 1 PL 15 x 1 (Fy=50)	Temp. bracing — 20 x 12 I, 2 PL 12 x 2¾, 1 PL 14½ x 1½ (Fy=50)	Temp. bracing — 20 x 12 I, 2 PL 12 x 2, 1 PL 16 x 1 (Fy=50)		
El. 264'							
El. 253	See 10-JK2-358 — 14 WF 342 (Fy=50)	See 10-JK2-358 — 14 WF 370 (Fy=50)	See 10-JK2-358 — 14 WF 287 (Fy=50)	See 10-JK2-358 — 14 WF 370 (Fy=50)	See 10-JK2-358 — 14 WF 264 (Fy=50)		
Top of Base Pl.	El. 243'-4"	El. 243'-4"	El. 243'-4"	El. 243'-4"	El. 243'-4"		
Base Plate	53 x 6¼ x 4'-9"	54 x 6¼ x 4'-9"	49" x 5⅝ x 4'-3"	54 x 6¼ x 4'-9"	45 x 5⅛ x 4'-0"		

LICENSED PROFESSIONAL ENGINEER — LESLIE E. ROBERTSON — STATE OF NEW YORK

* Provide proper splice pls., bolt holes & finished col. top for future columns. Use upper col. one size smaller except as shown.
▲ See detail on 10-JK4-3 and 4.
■ Splice 3" above slab. See note on 10-JK2-2.
● See detail on 10-JK2-30.

10-J1-85

WORTHINGTON, SKILLING, HELLE & JACKSON — Civil & Structural Engineers

PROJECT: THE WORLD TRADE CENTER | TITLE: COLUMN SCHEDULE | DATE: 5-15-67

REVISIONS
5-1-68
6-7-68
6-28-68

	J73-1	J73-2
El. 332'		
El. 310'	JT-9	
El. 290'	Part of Truss	Part of Truss JT-10
El. 274'	14 WF 455 (Fy=50)	14 WF 426 (Fy=50)
El. 264'		14 WF 43 (Fy=42)
Top of base Pl.	See detail 10-JK4-4B; 14 WF 455 (Fy=50); El. 243'-4"	See detail 10-JK4-4B; 14 WF 426 (Fy=50); El. 243'-4"
Base Plate	55 × 6½ × 5'-0"	53 × 6 × 4'-9"

LICENSED PROFESSIONAL ENGINEER — LESLIE E. ROBERTSON — No. 34300 — UNIVERSITY OF THE STATE OF NEW YORK

- Provide proper splice pls., bolt holes & finished col. top for future columns. Use upper col. one size smaller except as shown.
- ▲ See detail on 10-JK4-3 and 4..
- ■ Splice 3" above slab. See note on 10-JK2-2.
- ● See detail on 10-JK2-30.

10-J1-86

WORTHINGTON, SKILLING, HELLE & JACKSON Civil & Structural Engineers

PROJECT THE WORLD TRADE CENTER | TITLE COLUMN SCHEDULE | DATE 5-15-67

REVISIONS

5-1-68
6-7-68
10-15-68

	J73-4	J73-5	J73-6	J73-7		
El. 332'						
El. 310'						
El. 290'						
El. 279'-3"						
El. 264'						
Top of Base Pl.	14 WF 193 (Fy=50) ▲ 14 WF 193 (Fy=50) El. 243'-4"	Temp. bracing 20x12I-2 Pls 12x5-1 Pl 10x3 (Fy=50) El. 243'-4"	Temp. bracing 14WF87 (Fy=50) 20x12I-2 Pls 12x5-1 Pl 10x3 (Fy=50) El. 243'-4"	14WF78 (Fy=42) 20x12I 2 Pls 12x1½ 1 Pl 17x¾ (Fy=50) Temp. bracing See detail on 10JK2-35B 14 WF 176 (Fy=50) El. 243'-4"		
Base Plate	35x3½x3'-2"	32x3½x2'-11"	40x5x3'-7"	39x3¾x3'-5"		

* Provide proper splice pls., bolt holes & finished col. top for future columns. Use upper col. one size smaller except as shown.
▲ See detail on 10-JK4-3 and 4.
■ Splice 3" above slab. See note on 10-JK2-2.
● See detail on 10-JK2-30.

10-J1-87

LICENSED PROFESSIONAL ENGINEER LESLIE E. ROBERTSON No. 84380 UNIVERSITY OF THE STATE OF NEW YORK

WORTHINGTON, SKILLING, HELLE & JACKSON Civil & Structural Engineers

PROJECT THE WORLD TRADE CENTER | TITLE COLUMN SCHEDULE | DATE 5-15-67

REVISIONS
5-1-68
6-7-68
10-15-68

	J73-8	J73-9	J73-10	J73-11	J73-12		
El. 332'							
El. 310'							
El. 290'							
El. 279'-3"	14 WF 87 (Fy=50)	14 WF 111 (Fy=50)		14 WF 111 (Fy=50)	14 WF 87 (Fy=50)		
El. 264'	Temp. bracing 20 x 12 I 2 Pl's 12 x 1/2 1 Pl 17 x 34 (Fy=50)	Temp. bracing 20 x 12 I 2 Pl's 12 x 1/2 1 Pl 17 x 34 (Fy=50)		Temp. bracing 20 x 12 I 2 Pl's 12 x 1/2 1 Pl 17 x 34 (Fy=50)	Temp. bracing 20 x 12 I 2 Pl's 12 x 1/2 1 Pl 17 x 34 (Fy=50)		
El. 253	See 10-JK2-35B 14 WF 176 (Fy=50)	See 10-JK2-35B 14 WF 193 (Fy=50)	▲ 14 WF 87 (Fy=50)	See 10-JK2-35B 14 WF 193 (Fy=50)	See 10-JK2-35B 14 WF 176 (Fy=50)		
Top of Base Pl.	El. 243'-4"	El. 243'-4"	El. 243'-4"	El. 243'-4"	El. 243'-4"		
Base Plate	37 x 3 3/4 x 3'-4"	38 x 3 7/8 x 3'-5"	20 x 2 1/8 x 2'-4"	38 x 3 7/8 x 3'-5"	37 x 3 3/4 x 3'-4"		

LICENSED PROFESSIONAL ENGINEER LESLIE E. ROBERTSON STATE OF NEW YORK

✱ Provide proper splice pls., bolt holes & finished col. top for future columns. Use upper col. one size smaller except as shown.
▲ See detail on 10-JK4-3 and 4.
■ Splice 3" above slab. See note on 10-JK2-2.
● See detail on 10-JK2-30.

10-J1-88

WORTHINGTON, SKILLING, HELLE & JACKSON · Civil & Structural Engineers

PROJECT THE WORLD TRADE CENTER | TITLE COLUMN SCHEDULE | DATE 5-15-67

REVISIONS
5-1-68

	J74-1
El. 332'	
El. 310'	
El. 290'	
El. 274'	℄ Girder 14WF68 (Fy=42)
El. 264'	14WF314 (Fy=50)
Top of base ℄ El. 243'-4"	14WF314 (Fy=50) ▶
Base Plate	47 × 5'4 × 4'-2"

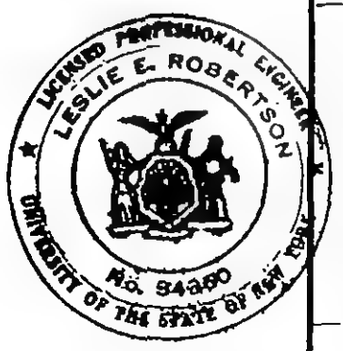

* Provide proper splice pls., bolt holes & finished col. top for future columns. Use upper col. one size smaller except as shown.
▲ See detail on 10-JK4-3 and 4..
■ Splice 3" above slab. See note on 10-JK2-2.
● See detail on 10-JK2-30.

10-J1-89

WORTHINGTON, SKILLING, HELLE & JACKSON — Civil & Structural Engineers

PROJECT: THE WORLD TRADE CENTER | TITLE: COLUMN SCHEDULE | DATE: 5-15-67

REVISIONS
5-1-68
6-7-68
10-15-68

	J74-2	J74-3	J74-4	J74-5	J74-6		
El. 332'							
El. 310'							
El. 290'			14WF314 (Fy=50)	14WF264 (Fy=50)	Det. 5 / 10-JK2-41; 14WF264 (Fy=50)		
El. 279'-3"			⊠	⊠			
El. 274'							
El. 264'	Bott. of ℄ Girder; 14WF550 (Fy=50)	Bott. of ℄ Girder; 14WF665 +℄ 15×3 (B.S.) (Fy=46)	Temp. bracing	Temp. bracing	Temp. bracing; 20×12 I, 2℄s 12×3, 1℄ 14×2 (Fy=50)		
El. 253	14WF550 (Fy=50)	14WF665 +℄ 15×3 (B.S.) (Fy=46)	20×12 II, 2℄s 12×5, 2℄s 10×4 (Fy=50)	20×12 II, 2℄s 12×5, 2℄s 10×4 (Fy=50)	See detail on 10-JK2-35B; 14WF398 (Fy=50)		
Top of Base ℄	El. 243'-4"	El. 243'-4" Temp. bracing	El. 243'-4"	El. 243'-4"	El. 243'-4"		
Base Plate	59×7×5'-5"	74×9×7'-4"	64×8¾×5'-9"	57×7¾×5'-1"	57×7×5'-1"		

LICENSED PROFESSIONAL ENGINEER — LESLIE E. ROBERTSON — NO. 54280 — STATE OF NEW YORK

✱ Provide proper splice pls., bolt holes & finished col. top for future columns. Use upper col. one size smaller except as shown.
▲ See detail on 10-JK4-3 and 4.
■ Splice 3" above slab. See note on 10-JK2-2.
● See detail on 10-JK2-30.
⊠ Splice detail, see 10-JK2-35A.

10-J1-90

WORTHINGTON, SKILLING, HELLE & JACKSON — Civil & Structural Engineers

PROJECT: THE WORLD TRADE CENTER | TITLE: COLUMN SCHEDULE | DATE: 5-15-67

REVISIONS
5-1-68
6-7-68

	J74-7	J74-8	J74-9	J74-10	J74-11
El. 332'					
El. 310'					
El. 290'	Det. 5 / 10-JK2-41 — 14 WF 264 (Fy=50)	Det. 1 / 10-JK2-41 — 14 WF 211 (Fy=50)	Det. 3 / 10-JK2-41 — 14 WF 167 (Fy=50)	Det. 3 / 10-JK2-41 — 14 WF 167 (Fy=50)	Det. 1 / 10-JK2-41 — 14 WF 211 (Fy=50)
El. 279'-3"	Temp. bracing — 20×12 I, 2 PL 12×3, 1 PL 14×2 (Fy=50)	Temp. bracing — 20×12 I, 2 PL 12×2¾, 1 PL 14½×1½ (Fy=50)	Temp. bracing — 20×12 I, 2 PL 12×2½, 1 PL 15×1 (Fy=50)	Temp. bracing — 20×12 I, 2 PL 12×2½, 1 PL 15×1 (Fy=50)	Temp. bracing — 20×12 I, 2 PL 12×2¾, 1 PL 14½×1½ (Fy=50)
El. 264'	See 10-JK2-35B — 14 WF 398 (Fy=50)	See 10-JK2-35B — 14 WF 342 (Fy=50)	See 10-JK2-35B — 14 WF 287 (Fy=50)	See 10-JK2-35B — 14 WF 314 (Fy=50)	See 10-JK2-35B — 14 WF 342 (Fy=50)
El. 253					
Top of Base Pl.	El. 243'-4"	El. 243'-4"	El. 243'-4"	El. 243'-4"	El. 243'-4"
Base Plate	56×6½×5'-0"	53×6¼×4'-9"	49×5⅝×4'-3"	48×5⅝×4'-4"	53×6¼×4'-9"

LICENSED PROFESSIONAL ENGINEER — LESLIE E. ROBERTSON — No. 34360 — UNIVERSITY OF THE STATE OF NEW YORK

* Provide proper splice pls., bolt holes & finished col. top for future columns. Use upper col. one size smaller except as shown.
▲ See detail on 10-JK4-3 and 4.
■ Splice 3" above slab. See note on 10-JK2-2.
● See detail on 10-JK2-30.

10-J1-91

WORTHINGTON, SKILLING, HELLE & JACKSON Civil & Structural Engineers

PROJECT: THE WORLD TRADE CENTER | TITLE: COLUMN SCHEDULE | DATE: 5-15-67

REVISIONS
5-1-68
6-7-68
6-28-68

	J75-1	J75-2	J75-3	J-75-4	J75-5	J75-6	
El. 332'							
El. 310'							
El. 290'							
El. 279'-3"							
El. 274'							
El. 264'							
El. 253							
Top of Base PL	El. 243'-4"	El. 243'-4"	El. 243'-4"	El. 243'-4"	El. 243'-4"	El. 243'-4"	
Base Plate	69×8½×6'-4"	69×9×6'-4"	59×7¼×5'-5"	55×7×4'-11"	53×7×4'-9"	47×5⅜×4'-2"	

Temp. bracing; Bott. of PL Girder; 14WF 398 (Fy=50); 17×17 I, 2 PLs 17×4, 1 PL 9×2½ (Fy=50)

Temp. bracing; PL Girder; 14WF 136 (Fy=50); 14WF 398 (Fy=50); 17×17 I, 2 PLs 17×4, 1 PL 9×2½ (Fy=50)

Temp bracing; 14WF 228 (Fy=50); 14WF 342 (Fy=50); 14WF 426 (Fy=50)

Temp bracing; Det. 6 10-JK2-41; 14WF 228 (Fy=50); 20×12 I, 2 PLs 12×5, 1 PL 10×3 (Fy=50)

Temp bracing; Det. 7 10-JK2-41; 14WF 211 (Fy=50); 20×12 I, 2 PLs 12×5, 1 PL 10×3 (Fy=50)

Temp. bracing; Det. 8 10-JK2-41; 14WF 150 (Fy=50); 20×12 I, 2 PLs 12×2, 1 PL 16×1 (Fy=50); 14WF 287 (Fy=50)

See detail on 10-JK2-35B

✱ Provide proper splice pls., bolt holes & finished col. top for future columns. Use upper col. one size smaller except as shown.
▲ See detail on 10-JK4-3 and 4.
■ Splice 3" above slab. See note on 10-JK2-2.
● See detail on 10-JK2-30.

10-J1-92

LICENSED LESLIE ... No. 34360 UNIVERSITY OF THE STATE OF ...

WORTHINGTON, SKILLING, HELLE & JACKSON — Civil & Structural Engineers

PROJECT: THE WORLD TRADE CENTER | TITLE: COLUMN SCHEDULE | DATE: 5-15-67

REVISIONS
5-1-68
6-7-68

	J75-7	J75-8	J75-9	J75-10	J75-11	J-75-12
El. 332'						
El. 310'						
El. 290'	14WF136 (Fy=50)	14WF264 (Fy=50)		14WF142 (Fy=50)		14WF142 (Fy=50)
El. 279'-3"	Det. 9 10-JK2-41					
El. 264'	Temp. bracing 20×12 I 2 PL's 12×2 1 PL 16×1 (Fy=50)	20×12 I 2 PL's 12×3 1 PL 14×2 (Fy=50)				
El. 253	See 10-JK2-358 14WF264 (Fy=50)	Splice detail Similar to 10-JK2-358 (No Shear Head) Temp. bracing 14WF426 (Fy=50)	14WF78 (Fy=50)		14WF68 (Fy=50)	
Top of Base Pl.	El. 243'-4"	El. 243'-4"	El. 243'-4"		El. 243'-4"	
Base Plate	47×5¼×4'-2"	57×7×5'-2"	18×1½×1'-10"		14×1×1'-7"	

* Provide proper splice pls., bolt holes & finished col. top for future columns. Use upper col. one size smaller except as shown.
▲ See detail on 10-JK4-3 and 4.
■ Splice 3" above slab. See note on 10-JK2-2.
● See detail on 10-JK2-30.

10-J1-93

LICENSED PROFESSIONAL ENGINEER LESLIE E. ROBERTSON No. 34980 UNIVERSITY OF THE STATE OF NEW YORK

WORTHINGTON, SKILLING, HELLE & JACKSON — Civil & Structural Engineers

PROJECT: THE WORLD TRADE CENTER | TITLE: COLUMN SCHEDULE | DATE: 5-15-67

REVISIONS
5-1-68
6-7-68

	J75-13	J75-14	J75-15
El. 332'			
El. 310'			
El. 290'			
El. 279'-3"		14 WF 246 (Fy=50)	14 WF 142 (Fy=50)
El. 264'		20 x 12 I 2 PL 5 12 x 3 1 PL 14 x 2 (Fy=50)	Temp. bracing 20 x 12 I 2 PL 5 12 x 2 1 PL 16 x 1 (Fy=50)
El. 253	14 WF 78 (Fy=50)	Splice detail similar to 12-JK2.35B (No Shear head) Temp bracing 14 WF 426 (Fy=50)	See 10-JK2.35B 14 WF 287 (Fy=50)
Top of Base Pl.	El. 243'-4"	El. 243'-4"	El. 243'-4"
Base Plate	18 x 1½ x 1'-10"	57 x 7 x 5'-2"	47 x 5¼ x 4'-2"

LICENSED PROFESSIONAL ENGINEER — LESLIE E. ROBERTSON — No. 54260 — UNIVERSITY OF THE STATE OF NEW YORK

✱ Provide proper splice pls., bolt holes & finished col. top for future columns. Use upper col. one size smaller except as shown.
▲ See detail on 10-JK4-3 and 4.
■ Splice 3" above slab. See note on 10-JK2-2.
● See detail on 10-JK2-30.

10-J1-94

WORTHINGTON, SKILLING, HELLE & JACKSON Civil & Structural Engineers

PROJECT: THE WORLD TRADE CENTER | TITLE: COLUMN SCHEDULE | DATE: 5-15-67

REVISIONS

5-1-68
6-7-68
6-28-68

	J75-51	J75-52	J75-53				
El. 332'							
El. 310'							
El. 290'							
El. 279'-3"							
El. 264'							
Top of Base Pl.	14WF 74 (Fy=42) ▲ 14WF 78 (Fy=42) El. 243'-4"	Temp. bracing 1 Pl 16x1 20x12I-2 Pls 12x2-1 (Fy=50) El. 243'-4"	Temp. bracing 1 Pl 16x1 20x12I-2 Pls 12x2-1 (Fy=50) El. 243'-4"				
Base Plate	21 x 2 x 1'-9"	24 x 2½ x 2'-4"	32 x 3½ x 2'-11"				

✱ Provide proper splice pls., bolt holes & finished col. top for future columns. Use upper col. one size smaller except as shown.
▲ See detail on 10-JK4-3 and 4.
■ Splice 3" above slab. See note on 10-JK2-2.
● See detail on 10-JK2-30.

10-J1-95

LICENSED PROFESSIONAL ENGINEER LESLIE E. ROBERTSON No. 84350 UNIVERSITY OF THE STATE OF NEW YORK

WORTHINGTON, SKILLING, HELLE & JACKSON — Civil & Structural Engineers

PROJECT: THE WORLD TRADE CENTER | TITLE: COLUMN SCHEDULE | DATE: 5-15-67

REVISIONS
5-1-68

	J7G-2	J7G-3	J7G-4	J7G-5	J7G-6		
El. 332'							
El. 310'							
El. 290'	14 WF 111 (Fy=50)	14 WF 111 (Fy=50)	14 WF 95 (Fy=50)	14 WF 95 (Fy=50)	14 WF 111 (Fy=50)		
El. 279'-3"							
El. 264'	14 WF 246 (Fy=50)	℄ Girder 14 WF 136 (Fy=50)		14 WF 237 (Fy=50)	14 WF 287 (Fy=50)		
El. 253	▲ 14 WF 246 (Fy=50)	14 WF 193 (Fy=50)		▲ 14 WF 237 (Fy=50)	▲ 14 WF 287 (Fy=50)		
Top of Base Pl.	El. 243'-4"	El. 243'-4"		El. 243'-4"	El. 243'-4"		
Base Plate	33 × 3 × 3'-0"	39 × 3¾ × 3'-5"		35 × 3½ × 3'-2"	40 × 4 × 3'-6"		

* Provide proper splice pls., bolt holes & finished col. top for future columns. Use upper col. one size smaller except as shown.
▲ See detail on 10-JK4-3 and 4.
■ Splice 3" above slab. See note on 10-JK2-2.
● See detail on 10-JK2-30.

10-J1-97

LICENSED PROFESSIONAL ENGINEER — LESLIE E. ROBERTSON — No. 54350 — STATE OF NEW YORK

C

WORTHINGTON, SKILLING, HELLE & JACKSON — Civil & Structural Engineers

PROJECT: THE WORLD TRADE CENTER | TITLE: COLUMN SCHEDULE | DATE: 5-15-67

REVISIONS
5-1-68
9-13-68

	J76-51	J76-52	J76-53
El. 332'			
El. 310'			
El. 290'			
El. 279'3"			
El. 264'	Rt. Girder 14WF87 (Fy=50)	Bott. of girder	Bott. of girder
El. 253	14WF111 (Fy=50)	14WF68 (Fy=50)	14WF68 (Fy=50)
Top of Base Pl.	El. 243'-4"	El. 243'-4"	El. 243'-4"
Base Plate	28 × 2 3/8 × 2'-6"	18 × 1 3/4 × 1'-10"	18 × 1 3/4 × 1'-10"

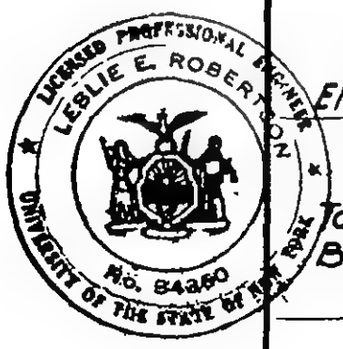

* Provide proper splice pls., bolt holes & finished col. top for future columns. Use upper col. one size smaller except as shown.
▲ See detail on 10-JK4-3 and 4.
■ Splice 3" above slab. See note on 10-JK2-2.
● See detail on 10-JK2-30.

10-J1-99

WORTHINGTON, SKILLING, HELLE & JACKSON — Civil & Structural Engineers

PROJECT: THE WORLD TRADE CENTER | TITLE: COLUMN SCHEDULE | DATE: 5-15-67

REVISIONS
1-13-69

	K26-1	K26-2	K26-3	K26-4	K26-5	K26-6	K26-7
El. 332'							
El. 310'	14 WF 202 (Fy=50)	14 WF 264 (Fy=50)	14 WF 202 (Fy=50)	14 WF 202 (Fy=50)	14 WF 264 (Fy=50)	14 WF 202 (Fy=50)	14 WF 314 (Fy=50)
El. 290'							
El. 279'-3"							
El. 264'							
El. 253							
Top of Base Pl.							
Base Plate							

* Provide proper splice pls., bolt holes & finished col. top for future columns. Use upper col. one size smaller except as shown.
▲ See detail on 10-JK4-3 and 4.
■ Splice 3" above slab. See note on 10-JK2-2.
● See detail on 10-JK2-30.

LICENSED PROFESSIONAL ENGINEER — LESLIE E. ROBERTSON — No. 34360 — REGISTERED IN THE STATE OF NEW YORK

DRAWN S.C.
REVIEWED R.T. & E.L.

10-K1-201

WORTHINGTON, SKILLING, HELLE & JACKSON — Civil & Structural Engineers

PROJECT: THE WORLD TRADE CENTER | TITLE: COLUMN SCHEDULE | DATE: 5-15-67

REVISIONS
10-20-67
11-8-67

	K27-1	K27-2	K27-3
El. 332'			
El. 310'			
Street level			
El. 294'	14 WF 95 (Fy=50)	14 WF 167 (Fy=50)	14 WF 87 (Fy=50)
El. 284'			
El. 274'	14 WF 127 (Fy=50)	14 WF 202 (Fy=50)	14 WF 111 (Fy=50)
El. 264'			
El. 253	14 WF 176 (Fy=50)	14 WF 314 (Fy=50)	14 WF 158 (Fy=50)
Top of base Pl at El. 241'			
Base Plate	38 × 3¾ × 3'-4"	54 × 5½ × 4'-3"	38 × 3¾ × 3'-4"

* Provide proper splice pls., bolt holes & finished col. top for future columns. Use upper col. one size smaller except as shown.
▲ See detail on 10-JK4-3 and 4.
■ Splice 3" above slab. See note on 10-JK2-2.
● See detail on 10-JK2-30.

10-K1-202

LICENSED PROFESSIONAL ENGINEER — LESLIE E. ROBERTSON — No. 34360 — UNIVERSITY OF THE STATE OF NEW YORK

A

WORTHINGTON, SKILLING, HELLE & JACKSON — Civil & Structural Engineers

PROJECT: THE WORLD TRADE CENTER | TITLE: COLUMN SCHEDULE | DATE: 5-15-67

REVISIONS
1-13-69

	K28-1	K28-2	K28-3	K28-4	K28-5	K28-6	K28-7
El. 332'							
El. 310'	14 WF 202 (Fy=50)	14 WF 264 (Fy=50)	14 WF 202 (Fy=50)	14 WF 202 (Fy=50)	14 WF 264 (Fy=50)	14 WF 202 (Fy=50)	14 WF 264 (Fy=50)
El. 290'							
El. 279'-3"							
El. 264'							
El. 253							
Top of Base Pl.							
Base Plate							

* Provide proper splice pls., bolt holes & finished col. top for future columns. Use upper col. one size smaller except as shown.
▲ See detail on 10-JK4-3 and 4.
■ Splice 3" above slab. See note on 10-JK2-2.
● See detail on 10-JK2-30.

LICENSED PROFESSIONAL ENGINEER — LESLIE E. ROBERTSON — No. 34360 — OF THE STATE OF NEW YORK

DRAWN S.C.
REVIEWED R.T. & E.L.

10-K1-203

C

WORTHINGTON, SKILLING, HELLE & JACKSON — Civil & Structural Engineers

PROJECT: THE WORLD TRADE CENTER | TITLE: COLUMN SCHEDULE | DATE: 5-15-67

REVISIONS
10-20-67
11-8-67
12-13-67
6-7-68

	K29-1	K29-2	K29-3	K29-4
El. 332'				
El. 310'				
Street level				
El. 294'	14 WF 119 (Fy=50)	14 WF 158 (Fy=50)	14 WF 142 (Fy=50)	14 WF 127 (Fy=50)
El. 284'				
El. 274'				
El. 264'	14 WF 136 (Fy=50)	14 WF 193 (Fy=50)	14 WF 184 (Fy=50)	14 WF 398 (Fy=50)
El. 253	▲ 14 WF 211 (Fy=50)	▲ 14 WF 314 (Fy=50)	▲ 14 WF 264 (Fy=50)	
Top of base Pl at El. 241'				
Base Plate	42 × 4'8 × 3'-5"	46 × 4½ × 4'-1"	44 × 4½ × 3'-10"	42 × 4 × 3'-3"

* Provide proper splice pls., bolt holes & finished col. top for future columns. Use upper col. one size smaller except as shown.
▲ See detail on 10-JK4-3 and 4.
■ Splice 3" above slab. See note on 10-JK2-2.
● See detail on 10-JK2-30.

10-K1-204

LESLIE E. ROBERTSON — REGISTERED PROFESSIONAL ENGINEER — No. 34960 — STATE OF NEW YORK

A

WORTHINGTON, SKILLING, HELLE & JACKSON — Civil & Structural Engineers

PROJECT: THE WORLD TRADE CENTER

TITLE: COLUMN SCHEDULE

DATE: 5-15-67

REVISIONS
10-20-67
11-8-67
4-7-72

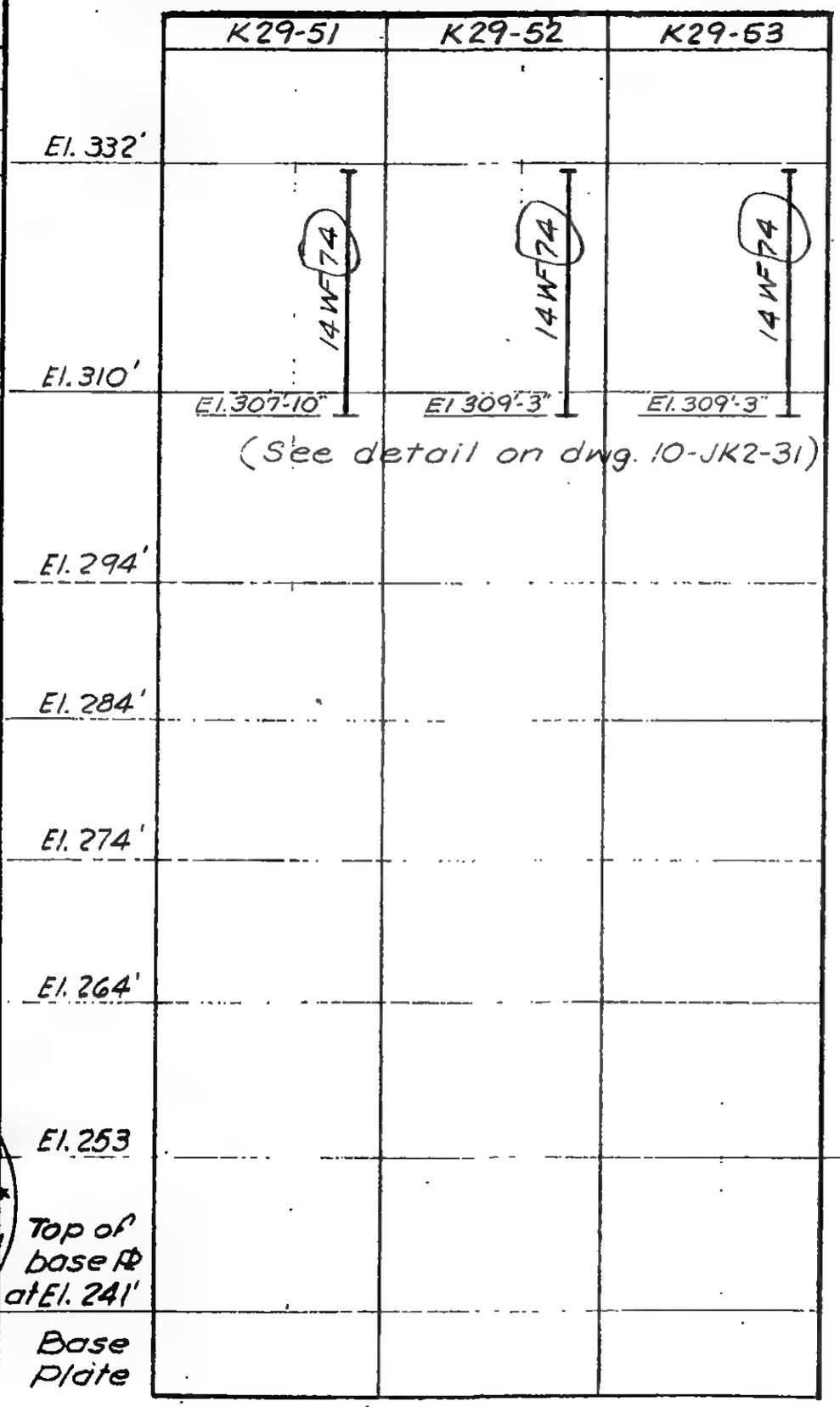

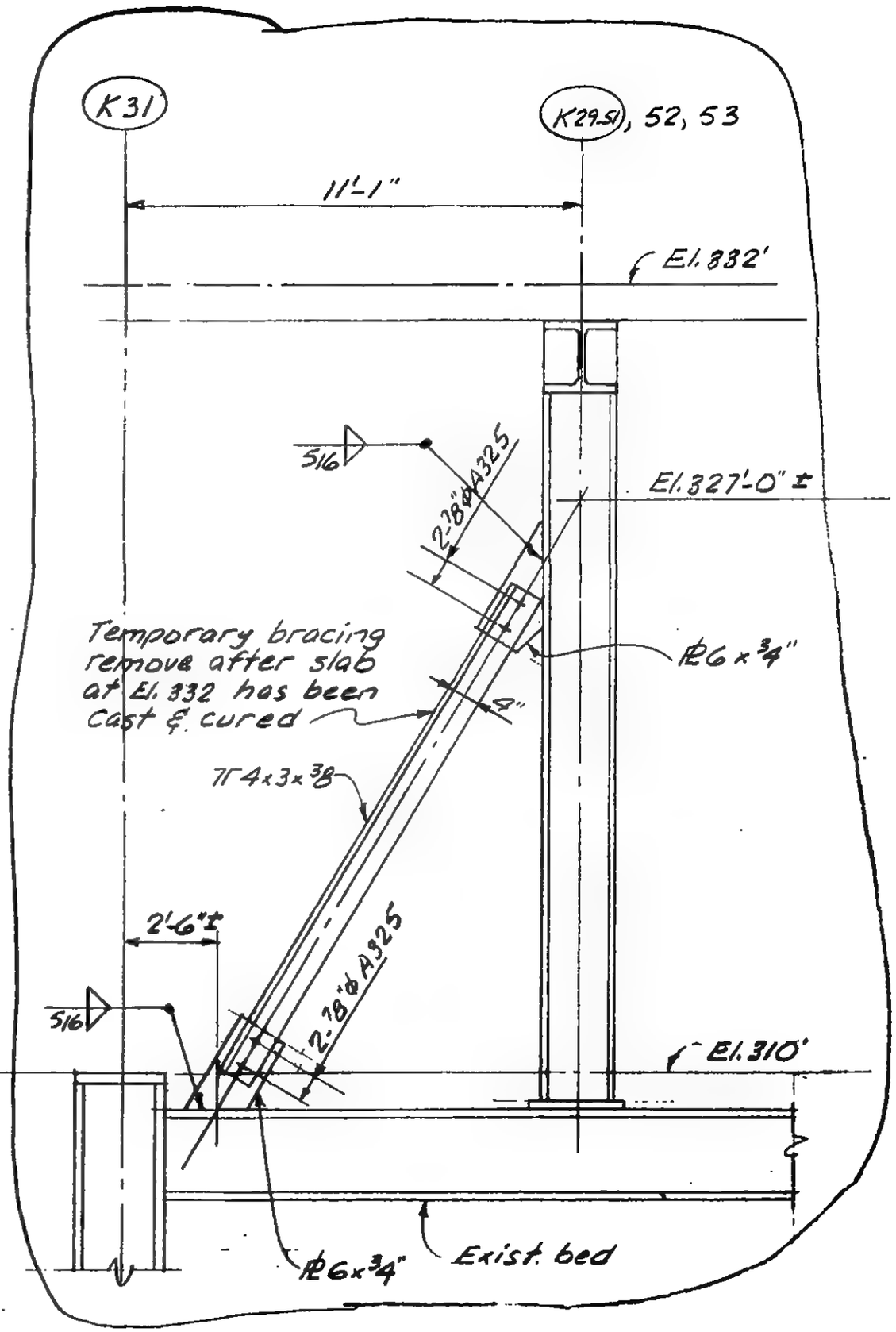

LICENSED PROFESSIONAL ENGINEER
LESLIE E. ROBERTSON
No. 34360
UNIVERSITY OF THE STATE OF NEW YORK

DRAWN
S.C.
Reviewed

10-K1-205

WORTHINGTON, SKILLING, HELLE & JACKSON — Civil & Structural Engineers

PROJECT: THE WORLD TRADE CENTER | TITLE: COLUMN SCHEDULE | DATE: 5-15-67

REVISIONS
1-13-69

	K30-1	K30-2	K30-3	K30-4	K30-5	K30-6	K30-7
El. 332'							
El. 310'	14 WF 84 (Fy=50)	14 WF 228 (Fy=50)	14 WF 84 (Fy=50)	14 WF 84 (Fy=50)	14 WF 228 (Fy=50)	14 WF 84 (Fy=50)	14 WF 228 (Fy=50)
El. 290'							
El. 279'-3"							
El. 264'							
El. 253							
Top of Base Pl.							
Base Plate							

LICENSED PROFESSIONAL ENGINEER — LESLIE E. ROBERTSON — No. 34360 — REGISTERED IN THE STATE OF NEW YORK

DRAWN S.C.
REVIEWED R.T. & E.L.

* Provide proper splice pls., bolt holes & finished col. top for future columns. Use upper col. one size smaller except as shown.
▲ See detail on 10-JK4-3 and 4.
■ Splice 3" above slab. See note on 10-JK2-2.
● See detail on 10-JK2-30.

10-K1-206

WORTHINGTON, SKILLING, HELLE & JACKSON — Civil & Structural Engineers

PROJECT: THE WORLD TRADE CENTER | TITLE: COLUMN SCHEDULE | DATE: 5-15-67

REVISIONS
- 10-20-67
- 11-8-67
- 12-23-71
- 1-15-72
- 11-27-72

	K31-1	K31-2	K31-3	K31-4	K31-5	K31-6	K31-7
El. 332'							12-JK2-181
El. 310'			See Dwg. Book 13 ■		See D.B. 13 ■	See D.B. 13 ■	14 WF 370 (Fy=50) ■
Street level						See 19-1053 for new cover ℄	
El. 294'	14 WF 111 (Fy=50) ●	14 WF 184 (Fy=50) ●	14 WF 264 (Fy=50)		14 WF 426 (Fy=50)	14 WF 398 (Fy=50)	14 WF 398 (Fy=50)
El. 284'							
El. 274'	14 WF 127 (Fy=50)	14 WF 246 (Fy=50)	14 WF 320 (Fy=50)				
El. 264'	▲	▲	▲	14 WF 84 (Fy=50)	14 WF 320 + ℄ 2B × 3 (B.S.) (Fy=42)	14 WF 320 + ℄ 23 × 2B (B.S.) (Fy=42)	14 WF 320 + ℄ 23 × 2B (B.S.) (Fy=42)
El. 253	14 WF 202 (Fy=50)	14 WF 370 (Fy=50)	14 WF 455 (Fy=50)				
Top of base ℄ at El. 241'							
Base Plate	40 × 3¾ × 3'-1"	54 × 5⅞ × 4'-3"	62 × 7 × 4'-9"	20 × 2⅛ × 2'-4"	60 × 7 × 5'-6"	60 × 7 × 5'-5"	60 × 7 × 5'-6"

* Provide proper splice pls., bolt holes & finished col. top for future columns. Use upper col. one size smaller except as shown.
▲ See detail on 10-JK4-3 and 4.
■ Splice 3" above slab. See note on 10-JK2-2.
● See detail on 10-JK2-30.

LICENSED PROFESSIONAL ENGINEER — LESLIE E. ROBERTSON — No. 34360 — UNIVERSITY OF THE STATE OF NEW YORK

DRAWN S.C.
REVIEWED E.L.

10-K1-207

WORTHINGTON, SKILLING, HELLE & JACKSON — Civil & Structural Engineers

PROJECT: THE WORLD TRADE CENTER | TITLE: COLUMN SCHEDULE | DATE: 5-15-67

REVISIONS
- 10-20-67
- 11-8-67
- 6-7-68
- 11-5-68
- 12-3-68
- 10-14-69

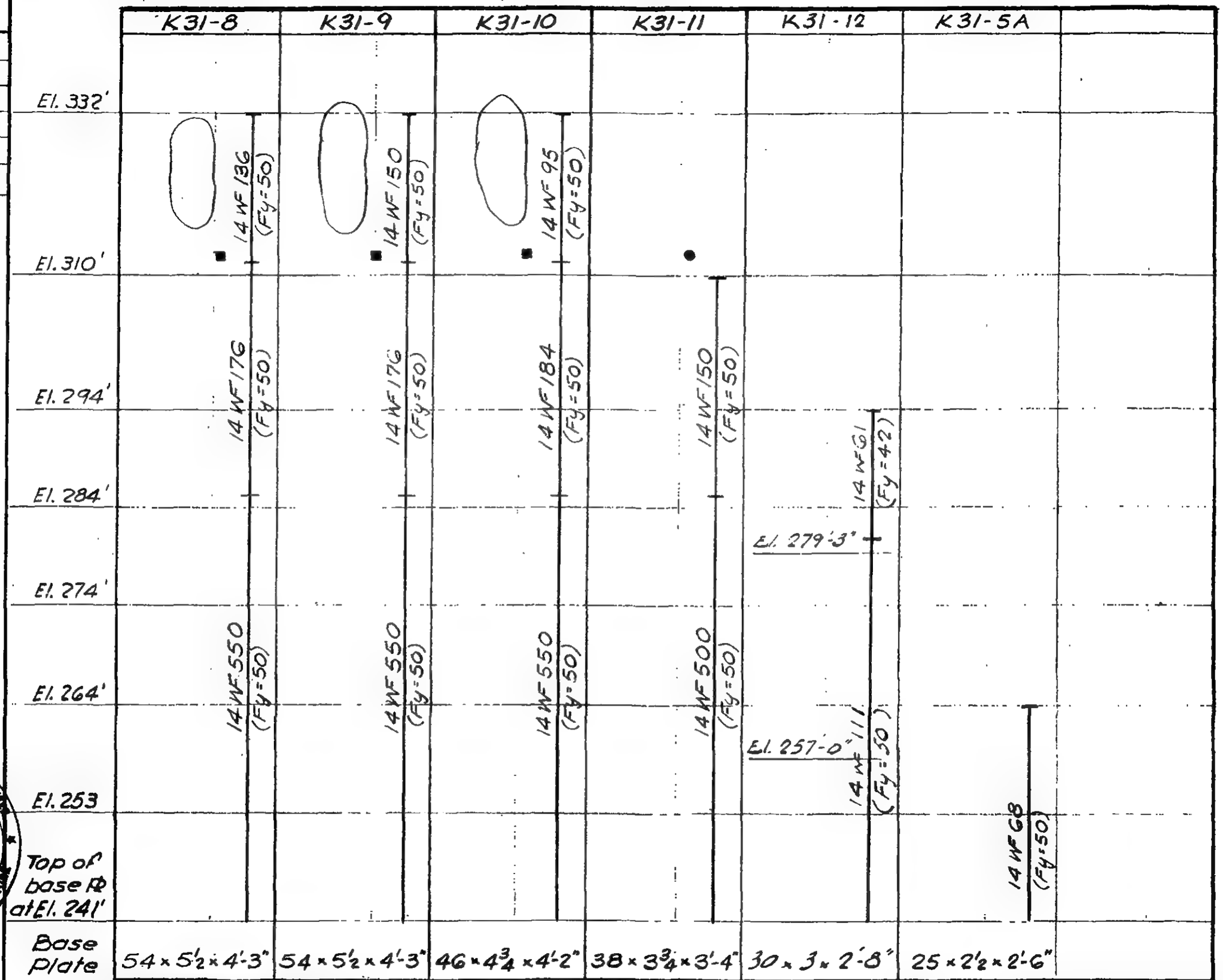

* Provide proper splice pts., bolt holes & finished col. top for future columns. Use upper col. one size smaller except as shown.
▲ See detail on 10-JK4-3 and 4.
■ Splice 3" above slab. See note on 10-JK2-2.
● See detail on 10-JK2-30.

LICENSED PROFESSIONAL ENGINEER — LESLIE E. ROBERTSON — No. 34360 — UNIVERSITY OF THE STATE OF NEW YORK

DRAWN S.C.
REVIEWED E.L.

10-K1-208

A

WORTHINGTON, SKILLING, HELLE & JACKSON — Civil & Structural Engineers

PROJECT: THE WORLD TRADE CENTER | TITLE: COLUMN SCHEDULE | DATE: 5-15-67

REVISIONS
-20-67
11-8-67

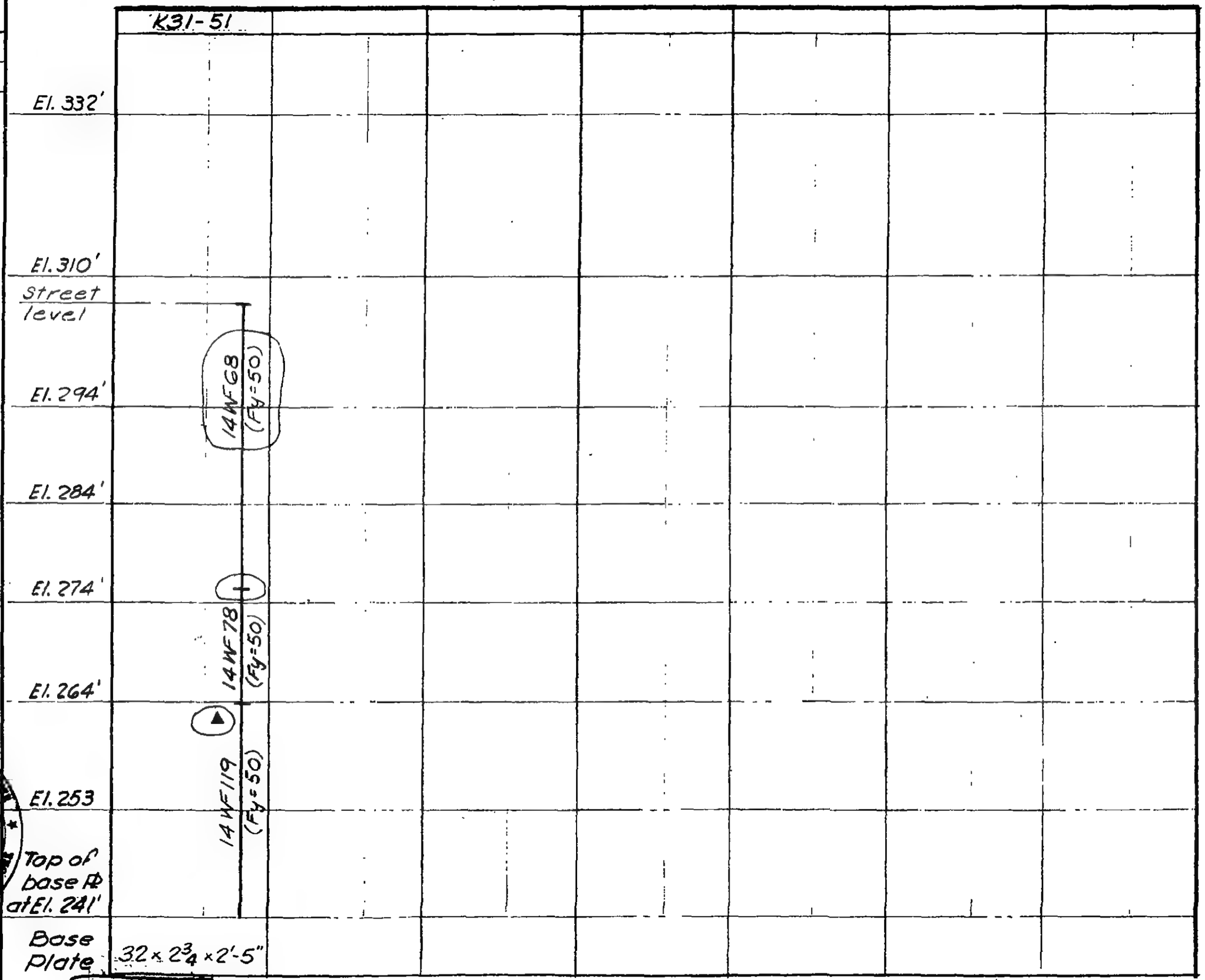

* Provide proper splice pls., bolt holes & finished col. top for future columns. Use upper col. one size smaller except as shown.
▲ See detail on 10-JK4-3 and 4.
■ Splice 3" above slab. See note on 10-JK2-2.
● [illegible] on 10-JK2-30.

LICENSED PROFESSIONAL ENGINEER — LESLIE E. ROBERTSON — No. 34360 — UNIVERSITY OF THE STATE OF NEW YORK

10-K1-209

WORTHINGTON, SKILLING, HELLE & JACKSON — Civil & Structural Engineers

PROJECT: THE WORLD TRADE CENTER | TITLE: COLUMN SCHEDULE | DATE: 5-15-67

REVISIONS
1-13-69

	K33-1	K33-2	K33-3	K33-4	K33-5	K33-6	K33-7
El. 332'							
El. 310'	14 WF 87 (Fy=50)	14 WF 228 (Fy=50)	14 WF 87 (Fy=50)	14 WF 87 (Fy=50)	14 WF 228 (Fy=50)	14 WF 87 (Fy=50)	14 WF 228 (Fy=50)
El. 290'							
El. 279'-3"							
El. 264'							
El. 253							
Top of Base Pl.							
Base Plate							

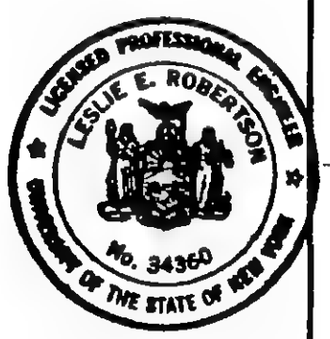

✱ Provide proper splice pls., bolt holes & finished col. top for future columns. Use upper col. one size smaller except as shown.
▲ See detail on 10-JK4-3 and 4.
■ Splice 3" above slab. See note on 10-JK2-2.
● See detail on 10-JK2-30.

DRAWN S.C.
REVIEWED R.T. & E.L.

10-K1-210

WORTHINGTON, SKILLING, HELLE & JACKSON — Civil & Structural Engineers

PROJECT: THE WORLD TRADE CENTER | TITLE: COLUMN SCHEDULE | DATE: 5-15-67

REVISIONS
10-20-67
11-8-67
12-23-71
1-15-72
11-27-72

	K35-1	K35-2	K35-3	K35-4	K-35-5	K35-6	K35-7
El. 332'							12-JK2-1B1
El. 310'		* (See Dwg. Book 13)		* (See DB 13)	* (See DB 13)	* (See DB 13.)	* 14 WF 264 (Fy=50)
Street level							
El. 294'	14 WF 142 (Fy=50)	14 WF 158 (Fy=50)		See 19-1053 for new cover Pl. 14 WF 264 (Fy=50)	See 19-1053 for new cover Pl. 14 WF 426 (Fy=50)	See 19-1053 for new cover Pl. 14 WF 398 (Fy=50)	14 WF 264 (Fy=50)
El. 284'							
El. 274'							
El. 264'	14 WF 176 (Fy=50)	14 WF 176 (Fy=50)			14 WF 730 (Fy=46)		
El. 253	▲ 14 WF 314 (Fy=50)	▲ 14 WF 264 (Fy=50)	14 WF 78 (Fy=50)			14 WF 320 + Pl 23 × 2 7/8 (B.S.) (Fy=42)	14 WF 730 (Fy=46)
Top of base Pl at El. 241'					14 WF 320 + Pl 23 × 2 7/8 (B.S.) (Fy=42)		
Base Plate	46 × 4 3/4 × 4'-0"	46 × 4 1/2 × 3'-10"	20 × 2 1/8 × 2'-4"	54 × 5 7/8 × 4'-9"	60 × 7 × 5'-5"	60 × 7 × 5'-5"	54 × 5 7/8 × 4'-9"

* Provide proper splice pls., bolt holes & finished col. top for future columns. Use upper col. one size smaller except as shown.
▲ See detail on 10-JK4-3 and 4.
■ Splice 3" above slab. See note on 10-JK2-2
● See detail on 10-JK2-30.

LICENSED PROFESSIONAL ENGINEER — LESLIE E. ROBERTSON — No. 34360 — UNIVERSITY OF THE STATE OF NEW YORK

DRAWN S.C.
REVIEWED E.L.

10-K1-211

WORTHINGTON, SKILLING, HELLE & JACKSON — Civil & Structural Engineers

PROJECT: THE WORLD TRADE CENTER | TITLE: COLUMN SCHEDULE | DATE: 5-15-67

REVISIONS
- 10-20-67
- 11-8-67
- 6-7-68
- 12-3-68
- 10-14-69

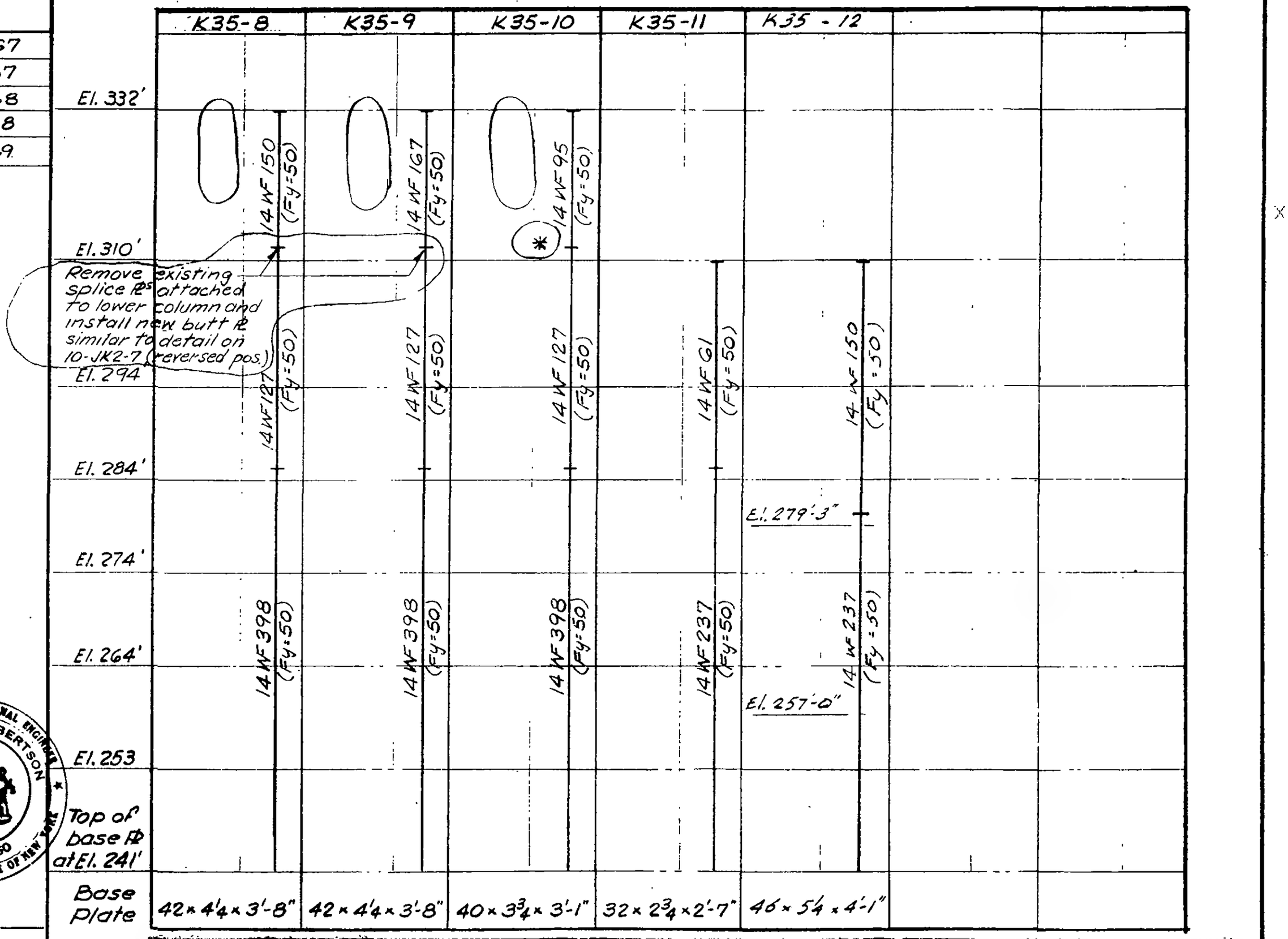

* Provide proper splice pls., bolt holes & finished col. top for future columns. Use upper col. one size smaller except as shown.
▲ See detail on 10-JK4-3 and 4.
■ Splice 3" above slab. See note on 10-JK2-2.
● See detail on 10-JK2-30.

LICENSED PROFESSIONAL ENGINEER — LESLIE E. ROBERTSON — No. 34360 — UNIVERSITY OF THE STATE OF NEW YORK

DRAWN S.C.
REVIEWED E.L.

10-K1-212

A

WORTHINGTON, SKILLING, HELLE & JACKSON — Civil & Structural Engineers

PROJECT: THE WORLD TRADE CENTER | TITLE: COLUMN SCHEDULE | DATE: 5-15-67

REVISIONS
10-20-67
11-8-67
2-4-69

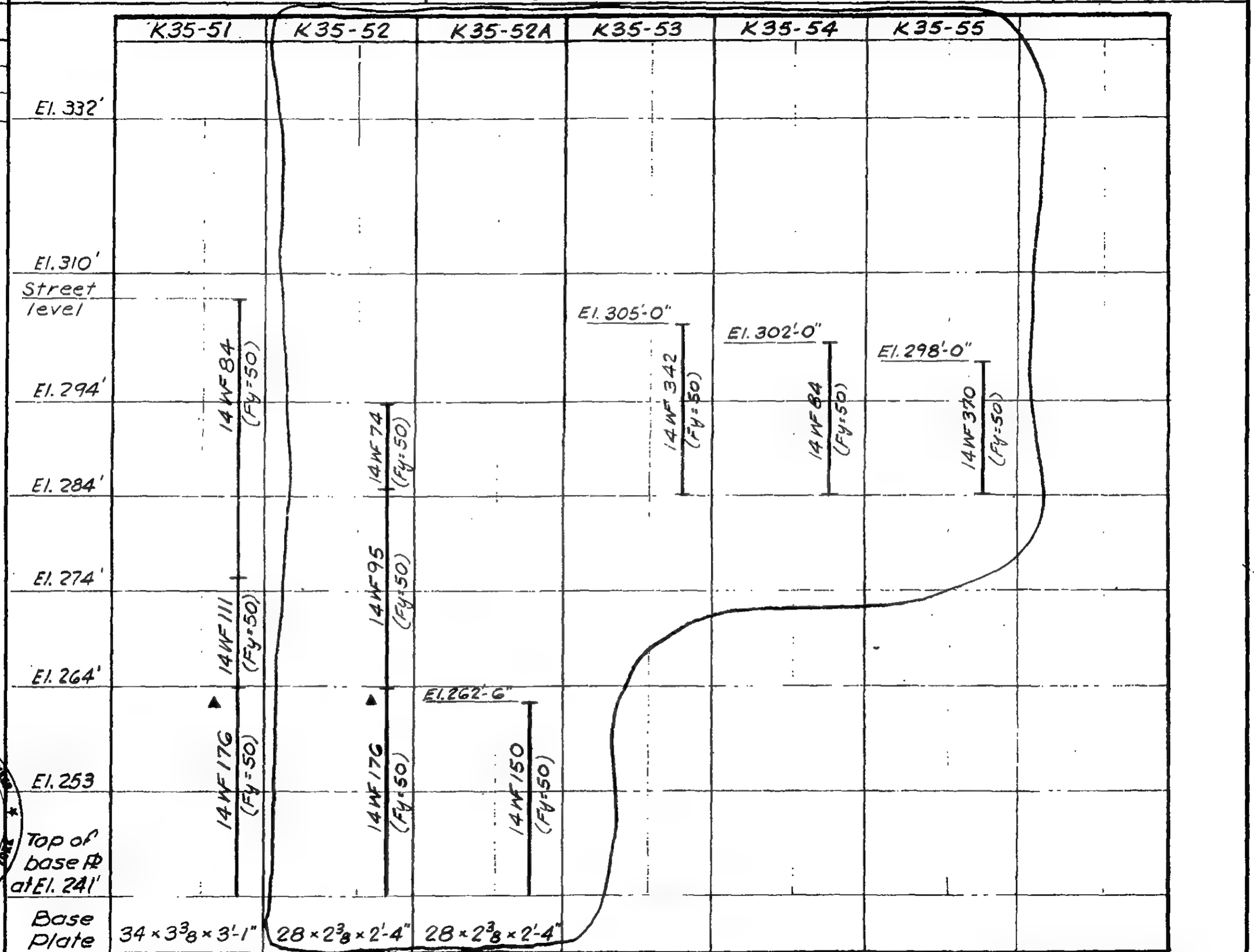

* Provide proper splice pls., bolt holes & finished col. top for future columns. Use upper col. one size smaller except as shown.
▲ See detail on 10-JK4-3 and 4.
■ Splice 3" above slab. See note on 10-JK2-2.
● See detail on 10-JK2-30.

REGISTERED PROFESSIONAL ENGINEER — LESLIE E. ROBERTSON — No. 34960 — UNIVERSITY OF THE STATE OF NEW YORK

DRAWN S.C.
REVIEWED E.L.

10-K1-213

A

WORTHINGTON, SKILLING, HELLE & JACKSON Civil & Structural Engineers

PROJECT THE WORLD TRADE CENTER | TITLE COLUMN SCHEDULE | DATE 5-15-67

REVISIONS
1-13-69

	K36-1	K36-2	K36-3	K36-4	K36-5	K36-6	K36-7
El. 332'							
El. 310'	14 WF 87 (Fy=50)	14 WF 228 (Fy=50)	14 WF 87 (Fy=50)	14 WF 87 (Fy=50)	14 WF 228 (Fy=50)	14 WF 87 (Fy=50)	14 WF 228 (Fy=50)
El. 290'							
El. 279'-3"							
El. 264'							
El. 253							
Top of Base Pl.							
Base Plate							

* Provide proper splice pls., bolt holes & finished col. top for future columns. Use upper col. one size smaller except as shown.
▲ See detail on 10-JK4-3 and 4.
■ Splice 3" above slab. See note on 10-JK2-2.
● See detail on 10-JK2-30.

LICENSED PROFESSIONAL ENGINEER
LESLIE E. ROBERTSON
No. 34360
REGISTERED IN THE STATE OF NEW YORK

DRAWN S.C.
REVIEWED R.T. & E.L.

10-K1-214

WORTHINGTON, SKILLING, HELLE & JACKSON — Civil & Structural Engineers

PROJECT: THE WORLD TRADE CENTER | TITLE: COLUMN SCHEDULE | DATE: 5-15-67

REVISIONS
2-4-69
2-11-69
4-4-69
5-29-69
1-15-72
11-27-72

	K37-1	K37-2	K37-3	K37-4	K37-5	K37-6	K37-7
El. 332'							12-JK2-181
El. 310'		* (See Dwg Book 13)		* (See DB 13)	* (See DB 13)	* (See DB 13)	* 14 WF 398 (Fy=50)
El. 294'	Street level 14 WF 150 (Fy=50)	14 WF 246 (Fy=50)		El 309'-0" 14 WF 455 (Fy=50)	El. 306'-0" 14 WF 665 (Fy=46)	14 WF 730 (Fy=46)	14 WF 665 (Fy=46)
El. 284'							
El. 274'	14 WF 237 (Fy=50)	14 WF 455 (Fy=50)		14 WF 500 (Fy=50)	14 WF 730 (Fy=46)	14 WF 730 (Fy=46)	14 WF 665 (Fy=46)
El. 264'			El. 261'-6"				
El. 253'	▲ 14 WF 500 (Fy=50)	▲ 14 WF 605 (Fy=46)	14 WF 264 (Fy=50)		El. 257' 14 WF 730 (Fy=46)	El. 257 14 WF 730 (Fy=46)	
Top of base Pl at El. 241'							
Base plate	47 × 5⅛ × 3'-11"	47 × 5⅛ × 3'-11"	28 × 2⅜ × 2'-4"	61 × 7¼ × 5'-1"	74 × 9 × 6'-2"	74 × 9 × 6'-2"	67 × 8 × 5'-7"

* Provide proper splice pls., bolt holes & finished col. top for future columns. Use upper col. one size smaller except as shown.
▲ See detail on 10-JK4-3 and 4.
■ Splice 3" above slab. See note on 10-JK2-2.
● See detail on 10-JK2-30.

LICENSED PROFESSIONAL ENGINEER — ESLIE E. ROBERTSON — No. 34360 — ENGINEER OF THE STATE OF NEW YORK

DRAWN S.C.
REVIEWED E.L.

10-K1-215

WORTHINGTON, SKILLING, HELLE & JACKSON — Civil & Structural Engineers

PROJECT: THE WORLD TRADE CENTER | TITLE: COLUMN SCHEDULE | DATE: 5-15-67

REVISIONS
9-20-68
12-3-68
2-4-69
2-11-69
10-14-69

	K37-8	K37-9	K37-10
El. 332'			
El. 310'	* 14WF150 (Fy=50)	* 14WF167 (Fy=50)	■ 14WF95 (Fy=50)
El. 294'	14WF237 (Fy=50)	14WF287 (Fy=50)	14WF184 (Fy=50)
El. 284'			
El. 274'	14WF314 (Fy=50)		
El. 264'		14WF605 (Fy=42)	14WF455 (Fy=50)
El. 253'			
Top of base Pl at El. 241'			
Base Plate	47x5⅛x3'-11"	47x5⅛x3'-11"	47x5⅛x3'-11"

* Provide proper splice pls., bolt holes & finished col. top for future columns. Use upper col. one size smaller except as shown.
▲ See detail on 10-JK4-3 and 4.
■ Splice 3" above slab. See note on 10-JK2-2.
● See detail on 10-JK2-30.

LICENSED PROFESSIONAL ENGINEER — LESLIE E. ROBERTSON — No. 34360 — UNIVERSITY OF THE STATE OF NEW YORK

DRAWN S.C.
REVIEWED E.L.

10-K1-216

WORTHINGTON, SKILLING, HELLE & JACKSON — Civil & Structural Engineers

PROJECT: THE WORLD TRADE CENTER | TITLE: COLUMN SCHEDULE | DATE: 5-15-67

REVISIONS
9-20-68
2-4-69

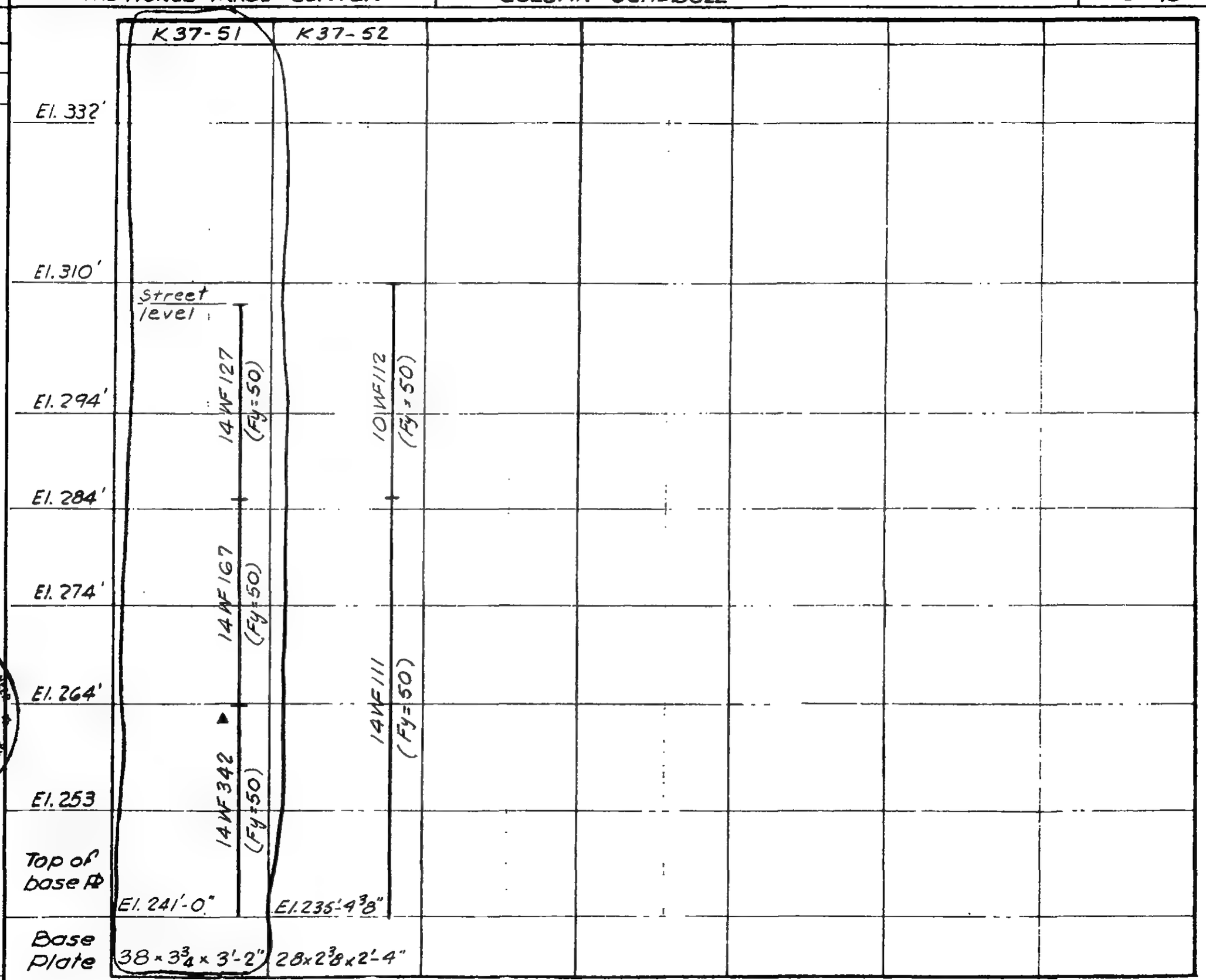

* Provide proper splice pls., bolt holes & finished col. top for future columns. Use upper col. one size smaller except as shown.
▲ See detail on 10-JK4-3 and 4.
■ Splice 3" above slab. See note on 10-JK2-2.
● See detail on 10-JK2-30.

LICENSED PROFESSIONAL ENGINEER — LESLIE E. ROBERTSON — No. 34360 — UNIVERSITY OF THE STATE OF NEW YORK

DRAWN S.C.
REVIEWED E.L.

10-K1-217

WORTHINGTON, SKILLING, HELLE & JACKSON — Civil & Structural Engineers

PROJECT: THE WORLD TRADE CENTER | TITLE: COLUMN SCHEDULE | DATE: 5-15-67

REVISIONS
9-20-68

	K38-1	K38-2					
El. 332'							
El. 310'							
El. 294'	14 WF 119 (Fy=50)	14 WF 342 (Fy=50)					
El. 284'							
El. 279'-3"							
El. 274'							
El. 264'	14 WF 127 (Fy=50)	14 WF 264 (Fy=50)					
El. 253							
Top of base Pl at El. 241'							
Base Plate	35 x 3 3/8 x 2'-11"	41 x 4 1/4 x 3'-5"					

LICENSED PROFESSIONAL ENGINEER
LESLIE E. ROBERTSON
No. 34360
UNIVERSITY OF THE STATE OF NEW YORK

* Provide proper splice pls., bolt holes & finished col. top for future columns. Use upper col. one size smaller except as shown.
▲ See detail on 10-JK4-3 and 4.
■ Splice 3" above slab. See note on 10-JK2-2.
● See detail on 10-JK2-30.

10-K1-218

WORTHINGTON, SKILLING, HELLE & JACKSON Civil & Structural Engineers

PROJECT THE WORLD TRADE CENTER | TITLE COLUMN SCHEDULE | DATE 5-15-67

REVISIONS
1-13-69

	K39-1	K39-2	K39-3	K39-4	K39-5	K39-6	K39-7
El. 332'							
El. 310'	14 WF 202 (Fy=50)	14 WF 264 (Fy=50)	14 WF 202 (Fy=50)	14 WF 202 (Fy=50)	14 WF 264 (Fy=50)	14 WF 202 (Fy=50)	14 WF 264 (Fy=50)
El. 290'							
El. 279'-3"							
El. 264'							
El. 253							
Top of Base Pl.							
Base Plate							

* Provide proper splice pls., bolt holes & finished col. top for future columns. Use upper col. one size smaller except as shown.
▲ See detail on 10-JK4-3 and 4.
■ Splice 3" above slab. See note on 10-JK2-2.
● See detail on 10-JK2-30.

LICENSED PROFESSIONAL ENGINEER — LESLIE E. ROBERTSON — No. 34360 — THE STATE OF NEW YORK

DRAWN S.C.
REVIEWED R.T. & E.L.

10-K1-219

WORTHINGTON, SKILLING, HELLE & JACKSON — Civil & Structural Engineers

PROJECT: THE WORLD TRADE CENTER | TITLE: COLUMN SCHEDULE | DATE: 5-15-67

REVISIONS
6-7-68
9-20-68
11-5-68

	K40-1	K40-2					
El. 332'							
El. 310'							
El. 290'	14 WF 158 (Fy = 50)	14 WF 103 (Fy = 50)					
El. 279'-3"							
El. 264'	14 WF 158 (Fy = 50)	14 WF 193 (Fy = 50)					
El. 253							
Top of Base Pl. at El. 241'							
Base Plate	42 x 4 3/8 x 3'-6"	45 x 5 1/8 x 3'-11"					

* Provide proper splice pls., bolt holes & finished col. top for future columns. Use upper col. one size smaller except as shown.
▲ See detail on 10-JK4-3 and 4.
■ Splice 3" above slab. See note on 10-JK2-2.
● See detail on 10-JK2-30.

LICENSED PROFESSIONAL ENGINEER — LESLIE E. ROBERTSON — No. 34360 — UNIVERSITY OF THE STATE OF NEW YORK

10 - K1 - 220

WORTHINGTON, SKILLING, HELLE & JACKSON Civil & Structural Engineers

PROJECT THE WORLD TRADE CENTER | TITLE COLUMN SCHEDULE | DATE 5-15-67

REVISIONS
2-4 69
2 11 69
- 5 - 72
11-27-72

	K41-1	K41-2	K41-3	K41-4	K41-5	K41-6	K41-7
El. 332'							12-JK2-181
El. 310'			* See Dwg Book 13	* See D.B. 13	* See D.B. 13	* See D.B. 13	* 14 WF 398 (Fy=50)
Street level							
El. 294'	14 WF 95 (Fy=50)	14 WF 158 (Fy=50)	14 WF 246 (Fy=50)	14 WF 500 (Fy=50)	14 WF 665 (Fy=46)	14 WF 320 + PL 22 x 2¾ (B.S.) (Fy=42)	14 WF 605 (Fy=46)
El. 284'							
El. 274'	14 WF 142 (Fy=50)	14 WF 237 (Fy=50)	14 WF 455 (Fy=50)	14 WF 550 (Fy=50)	14 WF 320 + PL 24 x 3 (B.S.) (Fy=42)	14 WF 320 + PL 22 x 2¾ (B.S.) (Fy=42)	14 WF 320 + PL 22 x 2¾ (B.S.) (Fy=42)
El. 264'							
El. 253'	▲ 14 WF 287 (Fy=50)	▲ 14 WF 500 (Fy=50)	14 WF 605 (Fy=46)				
Top of base PL at El. 241'							
Base Plate	33 x 3⅛ x 2'-9"	47 x 5⅛ x 3'-11"	48 x 5¼ x 4'-0"	61 x 7¼ x 5'-1"	74 x 9 x 6'-2"	74 x 9 x 6'-2"	67 x 8 x 5'-7"

* Provide proper splice pls., bolt holes & finished col. top for future columns. Use upper col. one size smaller except as shown.
▲ See detail on 10-JK4-3 and 4.
■ Splice 3" above slab. See note on 10-JK2-2.
● See detail on 10-JK2-30.

LICENSED PROFESSIONAL ENGINEER · LESLIE E. ROBERTSON · No. 34360 · UNIVERSITY OF THE STATE OF NEW YORK

DRAWN S.C.
REVIEWED E.L.

10-K1-221

WORTHINGTON, SKILLING, HELLE & JACKSON — Civil & Structural Engineers

PROJECT: THE WORLD TRADE CENTER | TITLE: COLUMN SCHEDULE | DATE: 5-15-67

REVISIONS
9-20-68
12-3-68
2-4-69
2-11-69
10-14-69
12-23-71
11-27-72

	K41-8	K41-9	K41-10	K41-11
El. 332'				
El. 310'	* 14WF150 (Fy=50)	* 14WF167 (Fy=50)	■ See Dwg Book 13	
El. 294'	14WF246 (Fy=50)	14WF287 (Fy=50)	Add Cover Pls See 19-K-1053 14WF136 (Fy=50)	14WF78 (Fy=50)
El. 284'				
El. 274'	14WF314 (Fy=50)			
El. 264'		14WF605 (Fy=42)	14WF237 (Fy=50)	14WF87 (Fy=50)
El. 253'				
Top of base Pl ●	El. 241'-0"	El. 241'-0"	El. 241'-0"	El. 235'-5⅛"
Base Plate	47 x 5⅛ x 3'-11"	47 x 5⅛ x 3'-11"	47 x 6⅛ x 3'-11"	33 x 3⅛ x 2'-9"

* Provide proper splice pls., bolt holes & finished col. top for future columns. Use upper col. one size smaller except as shown.
▲ See detail on 10-JK4-3 and 4.
■ Splice 3" above slab. See note on 10-JK2-2.
● See detail on 10-JK2-30.

LICENSED PROFESSIONAL ENGINEER — LESLIE E. ROBERTSON — No. 34360 — UNIVERSITY OF THE STATE OF NEW YORK

10-K1-222

WORTHINGTON, SKILLING, HELLE & JACKSON — Civil & Structural Engineers

PROJECT: THE WORLD TRADE CENTER | TITLE: COLUMN SCHEDULE | DATE: 5-15-67

REVISIONS

2-4-69

	K41-51
El. 332'	
El. 310'	
El. 294'	Street level
El. 284'	14 WF 103 (Fy=50)
El. 274'	14 WF 127 (Fy=50)
El. 264'	14 WF 228 ▲ (Fy=50)
El. 253	
Top of base Pl at El. 241'	
Base Plate	33 × 3⅛ × 2'-9"

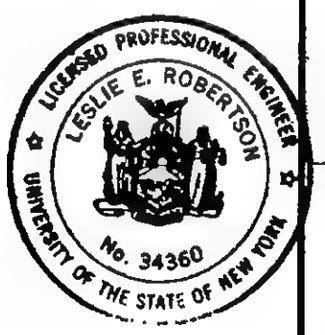

DRAWN S.C.

REVIEWED E.L.

* Provide proper splice pls., bolt holes & finished col. top for future columns. Use upper col. one size smaller except as shown.
▲ See detail on 10-JK4-3 and 4.
■ Splice 3" above slab. See note on 10-JK2-2.
● See detail on 10-JK2-30.

10-K1-223

WORTHINGTON, SKILLING, HELLE & JACKSON — Civil & Structural Engineers

PROJECT: THE WORLD TRADE CENTER | TITLE: COLUMN SCHEDULE | DATE: 5-15-67

REVISIONS
12-17-68
4-17-69

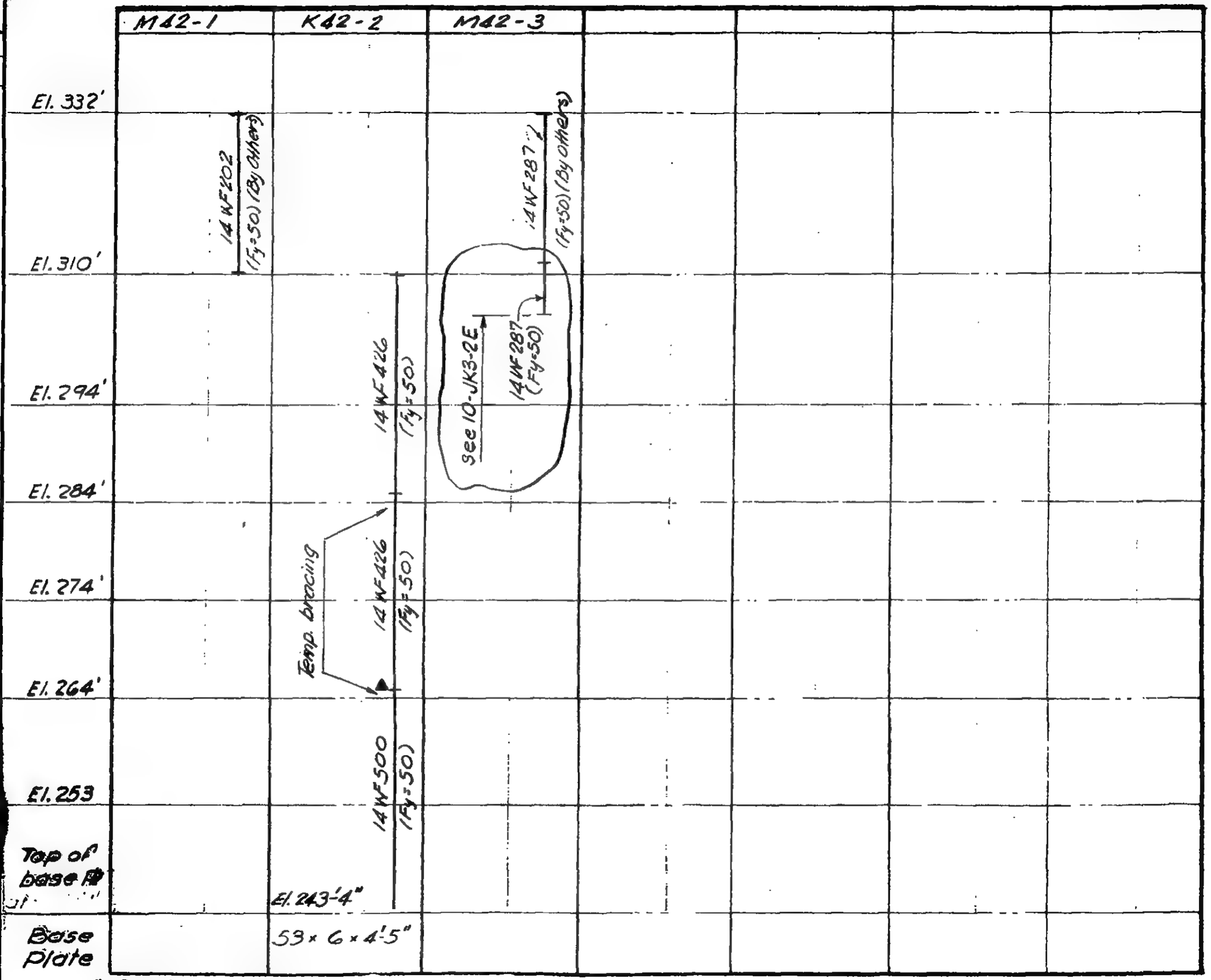

* Provide proper splice pls., bolt holes & finished col. top for future columns. Use upper col. one size smaller except as shown.
▲ See detail on 10-JK4-3 and 4.
■ Splice 3" above slab. See note on 10-JK2-2.
● See detail on 10-JK2-30.

LICENSED PROFESSIONAL ENGINEER — LESLIE E. ROBERTSON — NEW YORK

DRAWN
REVIEWED

10-K1-225

WORTHINGTON, SKILLING, HELLE & JACKSON — Civil & Structural Engineers

PROJECT: THE WORLD TRADE CENTER | TITLE: COLUMN SCHEDULE | DATE: 5-15-67

REVISIONS
2-4-69
2-11-69
3-1-69
3-12-69
3-21-69
10-23-69
11-27-72

	K43-1	K43-2	K43-3	K43-4	K43-5	K43-6	K43-7
El. 332'							
El. 310'			*See Dwg. Book 13	*See D.B. 13	*See D.B. 13	*See D.B. 13	*3" See Dwg. Book 13
El. 294'		Street level 14WF176 (Fy=50)	14WF605 (Fy=46)	14WF320 +R 23×3 (B.S.) (Fy=42)	14WF320 +R 24×3 (B.S.) (Fy=42)	14WF550 (Fy=50)	14WF264 (Fy=50)
El. 284'	14WF87 (Fy=50)						
El. 274'	14WF111 (Fy=50)	14-WF211 (Fy=50)	14WF605 (Fy=46)	14WF320 +R 23×3 (B.S.) (Fy=42)	14WF320 +R 24×3 (B.S.) (Fy=42)	14WF550 (Fy=50)	14WF287 (Fy=50)
El. 264'		℄ Slitter					
El. 253	14WF193 (Fy=50) ▲	14WF145 (Fy=50)	14WF320 +R 23×3 (B.S.) (Fy=42) ▲	14WF320 +R 24×3½ (B.S.) (Fy=42) ▲	14WF320 +R 24×3½ (B.S.) (Fy=42) ▲	14WF320 +R 23×3 (B.S.) (Fy=42) ▲	14WF500 (Fy=50) ▲
Top of base pl. at El. 241'							
Base plate	38 [illegible] ×2'-9"	47×5½×5'-11"	72×9×6'-2"	86×10¾×7'-2"	86×10¾×7'-2"	72×8¾×6'-0"	55×6¼×4'-7"

LICENSED PROFESSIONAL ENGINEER — LESLIE E. ROBERTSON — No. 34360 — UNIVERSITY OF THE STATE OF NEW YORK

* Provide proper splice plate, bolt holes & finished col. top for future columns. Use upper col. one size smaller except as shown.
▲ See detail on 10-JK2-3 and 4.
■ Splice 3" above floor. See note on 10-JK2-2.
● See detail on 10-JK2-10

10-K1-220

WORTHINGTON, SKILLING, HELLE & JACKSON Civil & Structural Engineers

PROJECT THE WORLD TRADE CENTER | TITLE COLUMN SCHEDULE | DATE 5-15-67

REVISIONS
3-68
10-23-69
11-27-72

	K43-8	K43-9
El. 332'	↓3' See Dwg Book 13	
El. 310'		
El. 294'	14WF264 (Fy=50)	14WF370 (Fy=50)
El. 284'		
El. 274'	14WF287 (Fy=50)	14WF370 (Fy=50)
El. 264'	▲	▲
El. 253	14WF287 (Fy=50)	14WF370 (Fy=50)
Top of base Pl at El. 241'		
Base Plate	55x6'4x4'-7"	46x5x3'-10"

DRAWN S.C
REVIEWED E L

* Provide proper splice pls., bolt holes & finished col. top for future columns. Use upper col. one size smaller except as shown.
▲ See detail on 10-JK4-3 and 4.
■ Splice 3" above slab. See note on 10-JK2-2.
● See detail on 10-JK2-30.

10-K1-227

WORTHINGTON, SKILLING, HELLE & JACKSON — Civil & Structural Engineers

PROJECT: THE WORLD TRADE CENTER | TITLE: COLUMN SCHEDULE | DATE: 5-15-67

REVISIONS
3-1-69
3-12-69
3-21-69

	K43-51	K43-52	K43-53
El. 332'			
El. 310'			
Street level			
El. 294'	14 WF 87 (Fy=50)	14 WF 87 (Fy=50)	12 Girder Top of col. El. 294'-0"
El. 284'			
El. 274'	14 WF 111 (Fy=50)	14 WF 136 (Fy=50)	14 WF 136 (Fy=50)
El. 264'			
El. 253	▲ 14 WF 202 (Fy=50)	▲ 14 WF 219 (Fy=50)	12 Girder
Top of base @ at El. 241'			
Base Plate	33 × 3⅛ × 2'-9"	35 × 3⅜ × 2'-11"	

✱ Provide proper splice pls., bolt holes & finished col. top for future columns. Use upper col. one size smaller except as shown.
▲ See detail on 10-JK4-3 and 4.
■ Splice 3" above slab. See note on 10-JK2-2.
● See detail on 10-JK2-30.

LICENSED PROFESSIONAL ENGINEER — LESLIE E. ROBERTSON — No. 34360 — UNIVERSITY OF THE STATE OF NEW YORK

DRAWN S.G.
REVIEWED E.L.

10-K1-228

WORTHINGTON, SKILLING, HELLE & JACKSON — Civil & Structural Engineers

PROJECT: THE WORLD TRADE CENTER | TITLE: COLUMN SCHEDULE | DATE: 5-15-67

REVISIONS
12-17-68
8-10-70

	K44-1	K44-2	K44-3	K44-4
El. 332'				
El. 310'	See det. 10-JK2-43 ■ 14WF68 (Fy=50)		*	
El. 294'	14WF287 (Fy=50)		14WF287 (Fy=50)	
El. 284'				
El. 274'	Temp. bracing		Temp. bracing	
El. 264'			14WF370 (Fy=50)	
El. 253	14WF370 (Fy=50)	14WF158 (Fy=50)		14WF455 (Fy=50)
Top of Base Pl.	El. 244'-0"	El. 243'-4"		El. 243'-4"
Base Plate	45 x 4 3/8 x 3'-9"	28 x 2 3/8 x 2'-4"		53 x 6 x 4'-5"

* Provide proper splice pls., bolt holes & finished col. top for future columns. Use upper col. one size smaller except as shown.
▲ See detail on 10-JK4-3 and 4.
■ Splice 3" above slab. See note on 10-JK2-2.
● See detail on 10-JK2-30.

10-K1-229

LICENSED PROFESSIONAL ENGINEER LESLIE E. ROBERTSON NEW YORK

WORTHINGTON, SKILLING, HELLE & JACKSON — Civil & Structural Engineers

PROJECT: THE WORLD TRADE CENTER | TITLE: COLUMN SCHEDULE | DATE: 5-15-67

REVISIONS
12-3-68
3-1-69
3-12-69
3-21-69
10-23-69
11-27-72

	K45-1	K45-2	K45-3	K45-4	K45-5	K45-6	K45-7
El. 332'							
El. 310'		* See Dwg Book 13	* See D.B. 13	* See D.B. 13	See D.B. 13		
Street level	Top of gird. @ El. 297'-2¾" ℞ Girder 14WF68 (Fy=50)	14WF320 + ℞ 18×1¼ (B.S.) (Fy=42)	14WF320 + ℞ 22×2⅝ (B.S.) (Fy=42)	14WF320 + ℞ 22×2⅝ (B.S.) (Fy=42)	3" 14WF455 (Fy=50)	14WF320 (Fy=50)	14WF287 (Fy=50)
El. 294'	Bott of gird. @ El. 294'-0" Hanger 14WF43 (Fy=36)						
El. 284'					El. 282'-0"	El. 284'-9"	
El. 274'	Bott. of hanger @ El. 282'-5"	14WF320 + ℞ 20×1⅜ (B.S.) (Fy=42)	14WF320 + ℞ 22×2¾ (B.S.) (Fy=42)	El. 279'-0" 14WF320 + ℞ 22×2¾ (B.S.) (Fy=42)	14WF500 (Fy=50)	14WF342 (Fy=50)	14WF342 (Fy=50)
El. 264'	℞ Girder 14WF43 (Fy=36)						
El. 253	14WF287 (Fy=50)	▲ 14WF320 + ℞ 22×1¾ (B.S.) (Fy=42)	▲ 14WF320 + ℞ 24×3 (B.S.) (Fy=42)	▲ 14WF320 + ℞ 24×3 (B.S.) (Fy=42)	▲ 14WF550 (Fy=50)	▲ 14WF370 (Fy=50)	▲ 14WF342 (Fy=50)
Top of base [illegible]							
Base Plate	42×4⅜×3'-6"	70×8½×5'-10"	84×10½×7'-0"	84×10½×7'-0"	69×8¼×5'-9"	55×6¼×4'-7"	57×6¼×4'-9"

* Provide proper splice pls., bolt holes & finished col. top for future columns. Use upper col. one size smaller except as shown.
▲ See detail on 10-JK4-3 and 4.
■ Splice 3" above slab. See note on 10-JK2-2.
● See detail on 10-JK2-30.

LICENSED PROFESSIONAL ENGINEER LESLIE E. ROBERTSON UNIVERSITY OF [illegible]

DRAWN
REVIEWED

10-K1-230

WORTHINGTON, SKILLING, HELLE & JACKSON — Civil & Structural Engineers

PROJECT: THE WORLD TRADE CENTER | TITLE: COLUMN SCHEDULE | DATE: 5-15-67

REVISIONS
12-3-68
10-23-69
11-27-72

	K45-B
El. 332'	See Dwg. Book 13
El. 310'	3"
El. 294'	14 WF 237 (Fy=50)
El. 284'	
El. 274'	14 WF 287 (Fy=50)
El. 264' ▲	
El. 253	14 WF 287 (Fy=50)
Top of base ✱	
	El. 241'-0"
Base Plate	46 x 5 x 3'-10"

✱ Provide proper splice pls., bolt holes & finished col. top for future columns. Use upper col. one size smaller except as shown.
▲ See detail on 10-JK4-3 and 4.
■ Splice 3" above slab. See note on 10-JK2-2.
● See detail on 10-JK2-30.

LICENSED PROFESSIONAL ENGINEER — LESLIE E. ROBERTSON — No. 34360 — UNIVERSITY OF THE STATE OF NEW YORK

DRAWN S.C.
REVIEWED E.L.

10-K1-231

WORTHINGTON, SKILLING, HELLE & JACKSON — Civil & Structural Engineers

PROJECT: THE WORLD TRADE CENTER | TITLE: COLUMN SCHEDULE | DATE: 5-15-67

REVISIONS
3-1-69
3-12-69
3-21-69

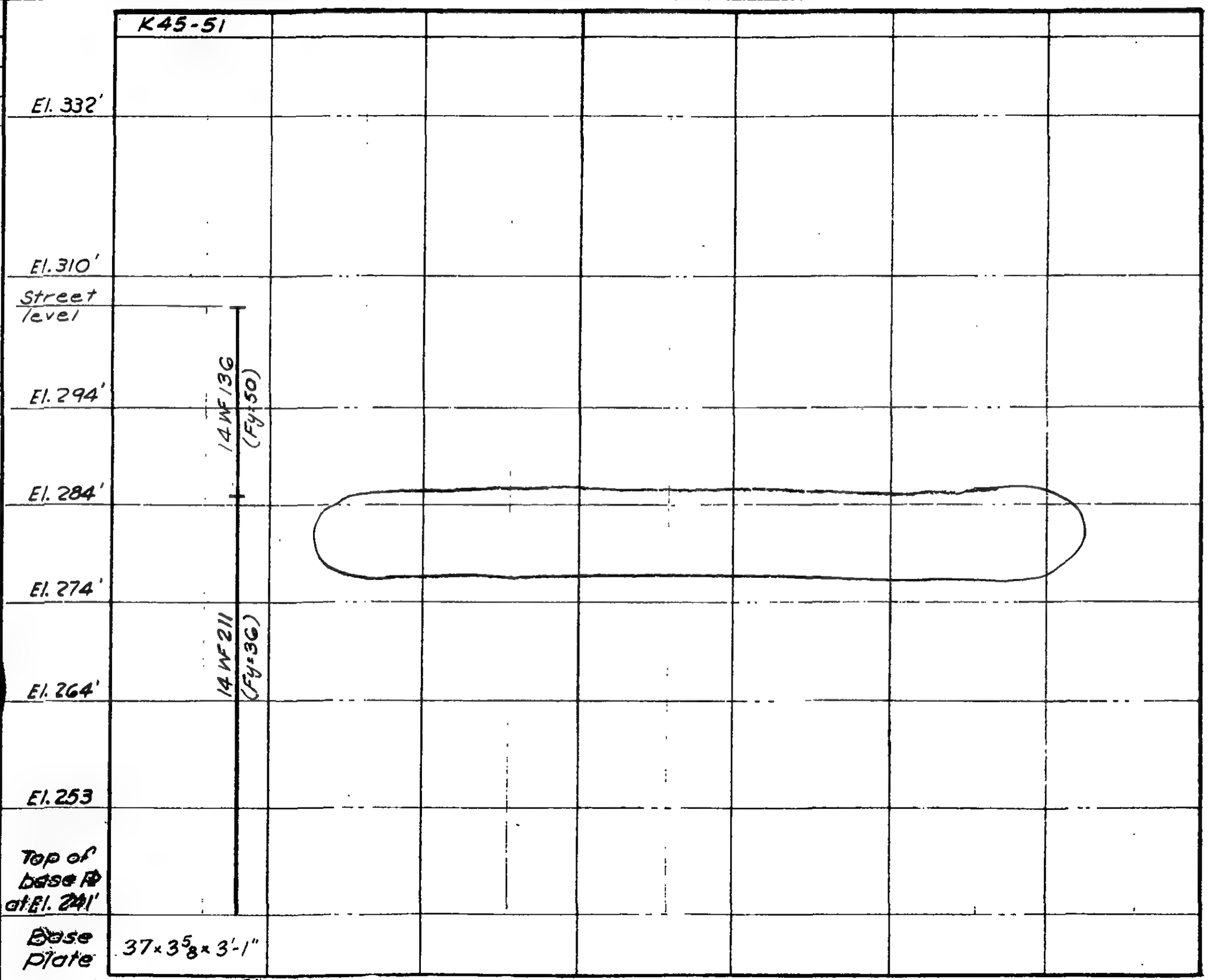

LICENSED PROFESSIONAL ENGINEER
LESLIE E. ROBERTSON
No. 34360
UNIVERSITY OF THE STATE OF NEW YORK

* Provide proper splice pls., bolt holes & finished col. top for future columns. Use upper col. one size smaller except as shown.
▲ See detail on 10-JK4-3 and 4.
■ Splice 3" above slab. See note on 10-JK2-2.
● See detail on 10-JK2-30.

DRAWN S.C.
REVIEWED

10-K1-232

WORTHINGTON, SKILLING, HELLE & JACKSON — Civil & Structural Engineers

PROJECT: THE WORLD TRADE CENTER | TITLE: COLUMN SCHEDULE | DATE: 5-15-67

REVISIONS
12-17-68
4-30-69

	K46-51	K46-52	K46-53
El. 332'			
El. 310'	See 12-JK2-107	See 12-JK2-108	
El. 294'	14WF370 (Fy=50)	Temp. bracing; 14WF605 (Fy=50)	
El. 284'			
El. 274'	Temp. bracing; ℄ Girder	14WF605 (Fy=50); ℄ Girder	
El. 264'		℄ Girder	14WF665 (Fy=50)
El. 253	14WF455 (Fy=50)		14WF665 (Fy=50)
Top of base ℄	El. 242'-0"		El. 243'-4"
Base Plate	63 × 7½ × 5'-3"		70 × 8½ × 5'-10"

LICENSED PROFESSIONAL ENGINEER — LESLIE E. ROBERTSON — No. 34360 — UNIVERSITY OF THE STATE OF NEW YORK

DRAWN S.C.
REVIEWED

✱ Provide proper splice pls., bolt holes & finished col. top for future columns. Use upper col. one size smaller except as shown.
▲ See detail on 10-JK4-3 and 4.
■ Splice 3" above slab. See note on 10-JK2-2.
● See detail on 10-JK2-30.

10-K1-233

WORTHINGTON, SKILLING, HELLE & JACKSON — Civil & Structural Engineers

PROJECT: THE WORLD TRADE CENTER | TITLE: COLUMN SCHEDULE | DATE: 5-15-67

REVISIONS
3-1-69
3-12-69
3-21-69
10-23-69
11-27-72

	K47-1	K47-2	K47-3	K47-4	K47-5	K47-6	K47-7
El. 332'							
El. 310'		* See Dwg Book 13	* See D.B. 13	* See D.B. 13	* See D.B. 13	* See D.B. 13	* See D.B. 13
Street level							
El. 294'	14 WF 136 (Fy=50)	14 WF 455 (Fy=50)	14 WF 320 + PL 23×3 (B.S.) (Fy=42)	14 WF 320 + PL 23×2⅞ (B.S.) (Fy=42)	14 WF 398 (Fy=50)	14 WF 228 (Fy=50)	14 WF 211 (Fy=50)
El. 284'							
El. 274'	14 WF 193 (Fy=50)	14 WF 500 (Fy=50)	14 WF 320 + PL 24×3 (B.S.) (Fy=42)	14 WF 320 + PL 23×3 (B.S.) (Fy=42)	14 WF 426 (Fy=50)	14 WF 264 (Fy=50)	14 WF 264 (Fy=50)
El. 264'							
El. 253	▲ 14 WF 211 (Fy=50)	▲ 14 WF 550 (Fy=50)	▲ 14 WF 320 + PL 24×3⅝ (B.S.) (Fy=42)	▲ 14 WF 320 + PL 24×3½ (B.S.) (Fy=42)	▲ 14 WF 500 (Fy=50)	▲ 14 WF 370 (Fy=50)	▲ 14 WF 370 (Fy=50)
Top of base PL at El. 241'							
Base Plate	47×5⅛×3'-11"	73×9×6'-1"	88×11×7'-4"	88×11×7'-4"	68×8¼×5'-8	51×5⅝×4'-3"	57×6¼×4'-9"

* Provide proper splice pls., bolt holes & finished col. top for future columns. Use upper col. one size smaller except as shown.
▲ See detail on 10-JK4-3 and 4.
■ Splice 3" above slab. See note on 10-JK2-2.
● See detail on 10-JK2-30.

LICENSED PROFESSIONAL ENGINEER — LESLIE E. ROBERTSON — No. 34360 — UNIVERSITY OF THE STATE OF NEW YORK

DRAWN SC
REVIEWED E.L.

10-K1-234

WORTHINGTON, SKILLING, HELLE & JACKSON — Civil & Structural Engineers

PROJECT: THE WORLD TRADE CENTER | TITLE: COLUMN SCHEDULE | DATE: 5-15-67

REVISIONS
3-1-69
3-12-69
3-21-69
10-23-69
11-27-72

	K47-8						
El. 332'	■ See Dwg. Book 13.						
El. 310'	14WF176 (Fy=50)						
El. 294'							
El. 284'							
El. 274'	14 WF 202 (Fy=50)						
El. 264'							
El. 253	▲ 14 WF 314 (Fy=50)						
Top of base Pl at El. 241'							
Base Plate	46×5×3'-10"						

LICENSED PROFESSIONAL ENGINEER — LESLIE E. ROBERTSON — No. 34360 — UNIVERSITY OF THE STATE OF NEW YORK

DRAWN S.C.
REVIEWED E.L.

* Provide proper splice pls., bolt holes & finished col. top for future columns. Use upper col. one size smaller except as shown.
▲ See detail on 10-JK4-3 and 4.
■ Splice 3" above slab. See note on 10-JK2-2.
● See detail on 10-JK2-30.

10-K1-235

WORTHINGTON, SKILLING, HELLE & JACKSON — Civil & Structural Engineers

PROJECT: THE WORLD TRADE CENTER | TITLE: COLUMN SCHEDULE | DATE: 5-15-67

REVISIONS
1-17-69
3-1-69
3-12-69
3-21-69
10-23-69
11-27-72

	K47-51	K47-52	K47-53	K47-54
El. 332'			See Dwg. Book 13	
El. 310'		14 WF 127 (Fy=50) ■		
Street level				
El. 294'	14 WF 119 (Fy=50)	14 WF 176 (Fy=50)	14 WF 320 + PL 22×2 (B.S.) (Fy=42)	14 WF 320 + PL 22×2 (B.S.) (Fy=42)
El. 284'				
El. 274'		14 WF 246 (Fy=50)	14 WF 320 + PL 22×2¼ (B.S.) (Fy=42)	14 WF 320 + PL 22×2¼ (B.S.) (Fy=42)
El. 264'	14 WF 202 (Fy=50)			
El. 253		14 WF 314 (Fy=50)	14 WF 320 + PL 22×2¾ (B.S.) ▲ (Fy=42)	14 WF 320 + PL 23×2¾ (B.S.) ▲ (Fy=42)
Top of base Pl	El. 248'-0"	El. 235'-7⅜"	El. 241'-0"	El. 241'-0"
Base Plate	34×3¼×2'-10"	49×5⅜×4'-1"	79×10×7'-2"	79×10×7'-2"

* Provide proper splice pls., bolt holes & finished col. top for future columns. Use upper col. one size smaller except as shown.
▲ See detail on 10-JK4-3 and 4.
■ Splice 3" above slab. See note on 10-JK2-2.
● See detail on 10-JK2-30.

LICENSED PROFESSIONAL ENGINEER — LESLIE E. ROBERTSON — No. 34360 — OF THE STATE OF NEW YORK

DRAWN S.C.
REVIEWED E.L.

10-K1-236

WORTHINGTON, SKILLING, HELLE & JACKSON — Civil & Structural Engineers

PROJECT: THE WORLD TRADE CENTER | TITLE: COLUMN SCHEDULE | DATE: 5-15-67

REVISIONS
12-17-68
4-17-69

	K48-1	K48-2	K48-3	K48-4	M48-5
El. 332'					
El. 310'	■		1/0-JK2-17		10-JK2-17
El. 294'	14WF342 (Fy=50)		14WF500 (Fy=50)		See detail on 10-JK3-2F; 14WF287 (Fy=50)
El. 284'					
El. 274'	Temp. bracing	14WF455 (Fy=50)	Temp. bracing	14WF605 (Fy=50)	
El. 264'	▲				
El. 253	14WF455 (Fy=50)		14WF228 (Fy=50)		14WF665 (Fy=50)
Top of base Pl	El. 242'-0"		El. 242'-0"		El. 241'-0"
Base Plate	55×6¼×4'-7"		33×3⅛×2'-9"		69×8¼×5'-9"

* Provide proper splice pls., bolt holes & finished col. top for future columns. Use upper col. one size smaller except as shown.
▲ See detail on 10-JK4-3 and 4.
■ Splice 3" above slab. See note on 10-JK2-2.
● See detail on 10-JK2-30.

LICENSED PROFESSIONAL ENGINEER — LESLIE E. ROBERTSON — No. 34360 — UNIVERSITY OF THE STATE OF NEW YORK

DRAWN S.C.
REVIEWED E.L.

10-K1-237

WORTHINGTON, SKILLING, HELLE & JACKSON — Civil & Structural Engineers

PROJECT: THE WORLD TRADE CENTER | TITLE: COLUMN SCHEDULE | DATE: 5-15-67

REVISIONS
3-1-69
3-12-69
3-21-69
10-23-69
11-27-72

	K49-1			K49-4	K49-5	K49-6	
El. 332'							
El. 310'				* See Dwg. Book 13.		* See D.B. 13	
Street level							
El. 294'	14 WF 119 (Fy=50)			14 WF 320 + PL 23 x 2⅞ (B.S.) (Fy=42)	See D.B. 13	14 WF 264 (Fy=50)	
El. 284'							
El. 274'				14 WF 320 + PL 23 x 3 (B.S.) (Fy=42)	14 WF 455 (Fy=50)	14 WF 314 (Fy=50)	
El. 264'	14 WF 193 (Fy=50)						
El. 253				▲ 14 WF 320 + PL 24 x 3¼ (B.S.) (Fy=42)	▲ 14 WF 550 (Fy=50)	14 WF 398 (Fy=50)	
Top of base PL at El. 241'							
Base Plate	41 x 4¼ x 3'-5"			88 x 11 x 7'-4"	69 x 8¼ x 5'-9"	57 x 6¼ x 4'-9"	

* Provide proper splice pls., bolt holes & finished col. top for future columns. Use upper col. one size smaller except as shown.
▲ See detail on 10-JK4-3 and 4.
■ Splice 3" above slab. See note on 10-JK2-2.
● See detail on 10-JK2-30.

LICENSED PROFESSIONAL ENGINEER — LESLIE E. ROBERTSON — No. 34360 — UNIVERSITY OF THE STATE OF NEW YORK

DRAWN S.C.
REVIEWED E.L.

10-K1-238

WORTHINGTON, SKILLING, HELLE & JACKSON — Civil & Structural Engineers

PROJECT: THE WORLD TRADE CENTER | TITLE: COLUMN SCHEDULE | DATE: 5-15-67

REVISIONS
1-17-69
3-1-69
3-12-69
3-21-69
6-13-69
11 27-72.

	K49-51	K49-52	K49-53	K49-54	K49-55	K49-56
El. 332'						
El. 310'				* See Dwg Book 13. El. 310'-4	See DB. 13	
El. 294'	Street level 14WF184 (Fy=50)	14WF53 (Fy=50)		14WF320 +R 22x2 (B.S.) (Fy=42)	14WF320 +R 22x2 (B.S.) Fy=42	
El. 284'						
El. 274'						(See 12-JK1-47) 14WF500 (Fy=36)
El. 264'	14WF184 (Fy=36)	(See 12-JK1-47) 14WF111 (Fy=36)	12 girder	14WF320 +R 22x2¼ (B.S.) (Fy=42)	14WF320 +R 22x2¼ (B.S.) (Fy=42)	
El. 253			14WF142 (Fy=36)	14WF320 +R 22x2¾ (B.S.) (Fy=42) ▲	14WF320 +R 22x2¾ (B.S.) (Fy=42) ▲	
Top of base Pl	El. 248'-0"	El. 248'-0"	El. 241'-0"	El. 241'-0"	El. 241'-0"	
Base Plate	31x2¾x2'-7"	28x2⅜x2'-4"	30x2⅝x2'-6"	79x10x7'-2"	79x10x7'-2"	

* Provide proper splice pls., bolt holes & finished col. top for future columns. Use upper col. one size smaller except as shown.
▲ See detail on 10-JK4-3 and 4.
■ Splice 3" above slab. See note on 10-JK2-2.
● See detail on 10-JK2-30.

LICENSED PROFESSIONAL ENGINEER — LESLIE E. ROBERTSON — No. 34360 — OF THE STATE OF NEW YORK

DRAWN S.C.
REVIEWED E.L.

10-K1-239

WORTHINGTON, SKILLING, HELLE & JACKSON — Civil & Structural Engineers

PROJECT: THE WORLD TRADE CENTER | TITLE: COLUMN SCHEDULE | DATE: 5-15-67

REVISIONS
12-17-68

	K50-1	K50-2	K50-3
El. 332'			
El. 310'	■	10-JK2-17	10-JK2-17
El. 294'	14WF342 (Fy=50)	14WF500 (Fy=50)	14WF500 (Fy=50)
El. 284'			
El. 274'	Temp. bracing ▲ 14WF455 (Fy=50)	Temp. bracing ▲ 14WF605 (Fy=50)	Temp. bracing ▲ 14WF550 (Fy=50)
El. 264'			
El. 253	14WF550 (Fy=50)	14WF730 (Fy=50)	14WF550 (Fy=50)
Top of base Pl	El. 242'-0"	El. 243'-4"	El. 249'-0"
Base Plate	55 × 6¼ × 4'-7"	74 × 9 × 6'-2"	72 × 8¾ × 6'-0"

LICENSED PROFESSIONAL ENGINEER — LESLIE E. ROBERTSON — No. 34360 — UNIVERSITY OF THE STATE OF NEW YORK

* Provide proper splice pls., bolt holes & finished col. top for future columns. Use upper col. one size smaller except as shown.
▲ See detail on 10-JK4-3 and 4.
■ Splice 3" above slab. See note on 10-JK2-2.
● See detail on 10-JK2-30.

10-K1-240

WORTHINGTON, SKILLING, HELLE & JACKSON — Civil & Structural Engineers

PROJECT: THE WORLD TRADE CENTER | TITLE: COLUMN SCHEDULE | DATE: 5-15-67

REVISIONS
3-1-69
3-12-69
3-21-69
10-23-69
11-27-72

	K51-1	K51-2	K51-3	K51-4	K51-5	K51-6	K51-7
El. 332'							℄ Girder
El. 310'		* See Dwg. Book 13	* See D.B. 13	* See D.B. 13	* See D.B. 13	* 14 WF 142 (Fy: 50)	■ 14 WF 87 (Fy: 50)
El. 294'	Street level 14WF87 (Fy:50)	14WF455 (Fy:50)	14WF320 + ℄ 23×2¾ (B.S.) (Fy:42)	14WF320 + ℄ 23×2⅞ (B.S.) (Fy:42)	14WF398 (Fy:50)	14WF219 (Fy:50)	14WF246 (Fy:50)
El. 284'							
El. 274'	14WF119 (Fy:50)	14WF500 (Fy:50)		14WF320 + ℄ 24×3 (B.S.) (Fy:42)	14WF455 (Fy:50)	14WF264 (Fy:50)	14WF287 (Fy:50)
El. 264'	El. 270'-4" ℄ girder	▲	▲	▲	▲	▲	
El. 253		14WF550 (Fy:50)	14WF320 + ℄ 23×3 (B.S.) (Fy:42)	14WF320 + ℄ 24×3⅜ (B.S.) (Fy:42)	14WF500 (Fy:50)	14WF320 (Fy:50)	14WF342 (Fy:50)
Top of base ℄		El. 241'-0"	El. 241'-0"	El. 241'-0"	El. 241'-0"	El. 241'-0"	El. 235'-8½"
Base Plate		73×9×6'-1"	85×10¾×7'-1"	88×11×7'-4"	69×8¼×5'-9"	57×6¼×4'-9"	56×6½×4'-8"

LICENSED PROFESSIONAL ENGINEER — LESLIE E. ROBERTSON — No. 34360 — UNIVERSITY OF THE STATE OF NEW YORK

DRAWN J.A.
REVIEWED E.L.

* Provide proper splice pls., bolt holes & finished col. top for future columns. Use upper col. one size smaller except as shown.
▲ See detail on 10-JK4-3 and 4.
■ Splice 3" above slab. See note on 10-JK2-2.
● See detail on 10-JK2-30.

10-K1-241

WORTHINGTON, SKILLING, HELLE & JACKSON — Civil & Structural Engineers

PROJECT: THE WORLD TRADE CENTER | TITLE: COLUMN SCHEDULE | DATE: 5-15-67

REVISIONS
1-6-69
1-17-69
3-1-69
3-12-69
3-21-69
6-13-69
11-27-12

	K51-51	K51-52	K51-53	K51-54	K51-55	K51-56	
El. 332'							
El. 310'					*See Dwg Book 13		
El. 294'	Street level 14WF95 (Fy=50)				14WF370 (Fy=50)		
El. 284'		14WF95 (Fy=50)					
El. 274'	(See 12-JK1-47) 14WF500 (Fy=42)	(See 12-JK1-47) 14WF500 (Fy=42)	R girder	R girder		(See 12-JK1-47) 14WF550 (Fy=36)	
El. 264'				265'-6 7/16"	14WF398 (Fy=50) ▲		
El. 253			14WF342 (Fy=36)	14WF78 (Fy=50)	14WF426 (Fy=50)		
Top of base Pl	El. 248'-0"	El. 248'-0"	El. 248'-0"	El. 241'-0"	El. 241'-0"		
Base Plate	32x3x2'-8"	23x1 3/4x2'-1"	30x2 5/8x2'-6"	28x2 3/8x2'-4"	61x7 1/2x5'-7"		

✱ Provide proper splice pls., bolt holes & finished col. top for future columns. Use upper col. one size smaller except as shown.
▲ See detail on 10-JK4-3 and 4.
■ Splice 3" above slab. See note on 10-JK2-2.
● See detail on 10-JK2-30.

LICENSED PROFESSIONAL ENGINEER — No. 34360 — UNIVERSITY OF THE STATE OF NEW YORK

DRAWN S.C.
REVIEWED E.L.

10-K1-242

WORTHINGTON, SKILLING, HELLE & JACKSON — Civil & Structural Engineers

PROJECT: THE WORLD TRADE CENTER | TITLE: COLUMN SCHEDULE | DATE: 5-15-67

REVISIONS
12-17-68

	K52-1	K52-2	K52-3
El. 332'			
El. 310'	■	10-JK2-17	10-JK2-17
El. 294'	14WF370 (Fy=50)	14WF550 (Fy=50)	14WF398 (Fy=50)
El. 284'			
El. 274'	Temp. bracing	Temp. bracing	Temp. bracing
El. 264'	▲ 14WF500 (Fy=50)	▲ 14WF605 (Fy=50)	▲ 14WF455 (Fy=50)
El. 253	14WF550 (Fy=50)	14WF730 (Fy=50)	14WF500 (Fy=50)
Top of base Pl	El. 242'-0"	El. 243'-4"	El. 247'-0"
Base Plate	56 × 6½ × 4'-8"	75 × 9¼ × 6'-3"	65 × 7¾ × 5'-5"

LICENSED PROFESSIONAL ENGINEER — LESLIE E. ROBERTSON — No. 34360 — UNIVERSITY OF THE STATE OF NEW YORK

* Provide proper splice pls., bolt holes & finished col. top for future columns. Use upper col. one size smaller except as shown.
▲ See detail on 10-JK4-3 and 4.
■ Splice 3" above slab. See note on 10-JK2-2.
● See detail on 10-JK2-30.

10-K1-243

WORTHINGTON, SKILLING, HELLE & JACKSON — Civil & Structural Engineers

PROJECT: THE WORLD TRADE CENTER | TITLE: COLUMN SCHEDULE | DATE: 5-15-67

REVISIONS
1-6-69
3-1-69
3-12-69
3-21-69
11-27-72

	K53-1	K53-2	K53-3		K53-5	K53-6	K53-7
El. 332'		* See Dwg. Book 13	* See D.B. 13		* See D.B. 13	* See D.B. 13	* See D.B. 13
El. 310'	Street level	14WF455 (Fy=50)	14WF320 +PL 23x2⅞ (B.S.) (Fy=42)		14WF342 (Fy=50)	14WF320 (Fy=50)	14WF500 (Fy=50)
El. 294'	14WF287 (Fy=50)						
El. 284'							
El. 274'	14WF119 (Fy=50)	14WF500 (Fy=50)	14WF320 +PL 23x3 (B.S.) (Fy=42)		14WF870 (Fy=50)	14WF370 (Fy=50)	14WF550 (Fy=50)
El. 264'	El. 268'-6" Girder	▲ 14WF550 (Fy=50)	▲ 14WF320 +PL 24x3½ (B.S.) (Fy=42)		▲ 14WF426 (Fy=50)	▲ 14WF445 (Fy=50)	▲ 14WF605 (Fy=46)
El. 253							
Top of base PL		El. 241'-0"	El. 241'-0"		El. 241'-0"	El. 241'-0"	El. 241'-0"
Base Plate		73 x 9 x 6'-1"	88 x 11 x 7'-4"		64 x 7½ x 5'-4"	64 x 7½ x 5'-4"	73 x 9 x 6'-1"

* Provide proper splice pls., bolt holes & finished col. top for future columns. Use upper col. one size smaller except as shown.
▲ See detail on 10-JK4-3 and 4.
■ Splice 3" above slab. See note on 10-JK2-2.
● See detail on 10-JK2-30.

LICENSED PROFESSIONAL ENGINEER — LYLE E. ROBERTSON — No. 34360 — UNIVERSITY OF THE STATE OF NEW YORK

DRAWN S.C.
REVIEWED E.L.

10-K1-244

WORTHINGTON, SKILLING, HELLE & JACKSON Civil & Structural Engineers

PROJECT THE WORLD TRADE CENTER | TITLE COLUMN SCHEDULE | DATE 5-15-67

REVISIONS
3-21-69
11-27-72

	K53-8
El. 332'	
El. 310'	
El. 294'	
El. 284'	
El. 274'	
El. 264'	
El. 253	
Top of base PL at El. 241'	
Base Plate	

* Provide proper splice pls., bolt holes & finished col. top for future columns. Use upper col. one size smaller except as shown.
▲ See detail on 10-JK4-3 and 4.
■ Splice 3" above slab. See note on 10-JK2-2.
● See detail on 10-JK2-30.

LICENSED PROFESSIONAL ENGINEER
LESLIE E. ROBERTSON
No. 34360
UNIVERSITY OF THE STATE OF NEW YORK

DRAWN S.C.
REVIEWED E.L.

10-K1-245

A

WORTHINGTON, SKILLING, HELLE & JACKSON — Civil & Structural Engineers

PROJECT: THE WORLD TRADE CENTER | TITLE: COLUMN SCHEDULE | DATE: 5-15-67

REVISIONS
1-6-69
1-17-69
3-1-69
3-12-69
3-21-69
6-13-69
11-27-72

	K53-51	K53-52	K53-53	K53-54	K53-55	K53-56	K53-57
El. 332'				*See Dwg. Book 13	*See D.B. 13	*See D.B. 13	*See D.B. 13
El. 310'				14WF370 (Fy=50)	14WF342 (Fy=50)	14WF342 (Fy=50)	14WF342 (Fy=50)
El. 294'	Street level						
El. 284'	14WF395 (Fy=50)	14WF395 (Fy=50)					
El. 274'	(See 12-JK1-47) 14WF550 (Fy=42)	(See 12-JK1-47) 14WF550 (Fy=42)		14WF398 (Fy=50)	14WF370 (Fy=50)	14WF370 (Fy=50)	14WF370 (Fy=50)
El. 264'			Girder El. 265'-6 3/16"	▲ 14WF426 (Fy=50)	▲ 14WF426 (Fy=50)	▲ 14WF426 (Fy=50)	▲ 14WF426 (Fy=50)
El. 253			14WF219 (Fy=96)				
Top of base Pl	El. 248'-0"	El. 248'-0"	El. 248'-0"	El. 241'-0"	El. 241'-0"	El. 241'-0"	El. 241'-0"
Base Plate	32 x 3 x 2'-8"	23 x 1 3/4 x 2'-1"	38 x 3 3/4 x 3'-2"	61 x 7 1/2 x 5'-7"	61 x 7 1/2 x 5'-7"	61 x 7 1/2 x 5'-7"	61 x 7 1/2 x 5'-7"

LICENSED PROFESSIONAL ENGINEER — LESLIE E. ROBERTSON — No. 34360 — UNIVERSITY OF THE STATE OF NEW YORK

DRAWN S.C.
REVIEWED E.L.

* Provide proper splice pls., bolt holes & finished col. top for future columns. Use upper col. one size smaller except as shown.
▲ See detail on 10-JK4-3 and 4.
■ Splice 3" above slab. See note on 10-JK2-2.
● See detail on 10-JK2-30.

10-K1-246

WORTHINGTON, SKILLING, HELLE & JACKSON Civil & Structural Engineers

PROJECT THE WORLD TRADE CENTER | TITLE COLUMN SCHEDULE | DATE 6-13-69

REVISIONS

	K53-58	K53-59					
El. 332'							
El. 310'							
El. 294'							
El. 284'							
El. 274'	(See 12-JK1-47) 14WF605 (Fy=36)	(See 12-JK1-47) 14WF665 (Fy=36)					
El. 264'							
El. 253							
Top of base Pl							
Base Plate							

DRAWN S.C.

REVIEWED E.L.

* Provide proper splice pls., bolt holes & finished col. top for future columns. Use upper col. one size smaller except as shown.
▲ See detail on 10-JK4-3 and 4.
■ Splice 3" above slab. See note on 10-JK2-2.
● See detail on 10-JK2-30.

10-K1-246 A

WORTHINGTON, SKILLING, HELLE & JACKSON — Civil & Structural Engineers

PROJECT: THE WORLD TRADE CENTER | TITLE: COLUMN SCHEDULE | DATE: 5-15-67

REVISIONS

12-17-68

	K54-1	K54-2	K54-3
El. 332'			
El. 310'	■	10-JK2-17	10-JK2-17
El. 294'	14WF237 (Fy=50)	14WF500 (Fy=50)	14WF426 (Fy=50)
El. 284'			
El. 274'	Temp. bracing	Temp. bracing	Temp. bracing
El. 264'	14WF342 (Fy=50) ▲	14WF605 (Fy=50) ▲	14WF550 (Fy=50) ▲
El. 253	14WF370 (Fy=50)	14WF605 (Fy=50)	14WF550 (Fy=50)
Top of base Pl	El. 244'-0"	El. 247'-0"	El. 247'-0"
Base Plate	45 × 4 7/8 × 3'-9"	72 × 8 3/4 × 6'-0"	67 × 8 × 5'-7"

* Provide proper splice pls., bolt holes & finished col. top for future columns. Use upper col. one size smaller except as shown.
▲ See detail on 10-JK4-3 and 4.
■ Splice 3" above slab. See note on 10-JK2-2.
● See detail on 10-JK2-30.

LICENSED PROFESSIONAL ENGINEER — LESLIE E. ROBERTSON — No. 34360 — UNIVERSITY OF THE STATE OF NEW YORK

10-K1-247

WORTHINGTON, SKILLING, HELLE & JACKSON — Civil & Structural Engineers

PROJECT: THE WORLD TRADE CENTER | TITLE: COLUMN SCHEDULE | DATE: 5-15-67

REVISIONS
12-17-68

	K54-51						
El. 332'							
El. 310'							
El. 294'	14 WF 158 (Fy=50)						
El. 284'							
El. 274'	Temp bracing 14 WF 228 (Fy=50)						
El. 264'	▲						
El. 253	14 WF 287 (Fy=50)						
Top of base Pl							
	El. 243'-4"						
Base plate	41 × 4'-0 × 3'-5"						

LICENSED PROFESSIONAL ENGINEER ★ LESLIE E. ROBERTSON ★ No. 34360 ★ UNIVERSITY OF THE STATE OF NEW YORK

✱ Provide proper splice pls., bolt holes & finished col. top for future columns. Use upper col. one size smaller except as shown.
▲ See detail on 10-JK4-3 and 4.
■ Splice 3" above slab. See note on 10-JK2-2.
● See detail on 10-JK2-30.

10-K1-248

WORTHINGTON, SKILLING, HELLE & JACKSON Civil & Structural Engineers

PROJECT THE WORLD TRADE CENTER | TITLE COLUMN SCHEDULE | DATE 5-15-67

REVISIONS
1-6-69
1-17-69
3-1-69
3-12-69
3-21-69
11-27-72.

	K55-1	K55-2	K55-3	K55-4	K55-5	K55-6	K55-7
El. 332'		*(See Dwg Book 13)	*(See D.B. 13)	*(See D.B. 13)	*(See D.B. 13)	■(See D.B. 13)	
El. 310'							
El. 294'	Street level 14WF167 (Fy=50)	14WF455 (Fy=50)	14WF320 +2PL 2 3/8 x 3 (B.S.) (Fy=42)	14WF320 +2PL 2 3/8 x 2 3/8 (Fy=42)	14WF320 +2PL 2 3/8 x 2 3/8 (Fy=42)	14WF320 +2PL 2 3/8 x 2 (B.S.) (Fy=42)	
El. 284'							
El. 274'	14WF202 (Fy=50)	14WF500 (Fy=50)	14WF320 +2PL 2 3/4 x 3 1/2 (B.S.) (Fy=42)	14WF320 +2PL 2 2 x 2 5/8 (Fy=42)	14WF320 +2PL 2 2 x 2 5/8 (Fy=42)	14WF320 +2PL 2 2 x 2 1/4 (B.S.) (Fy=42)	
El. 264'							
El. 253	14WF237 (Fy=50)	14WF550 (Fy=50)	▲14WF320 +2PL 2 4 x 3 1/2 (B.S.) (Fy=42)	▲14WF320 +2PL 2 3 x 3 (B.S.) (Fy=42)	▲14WF320 +2PL 2 3 x 3 (B.S.) (Fy=42)	▲14WF320 +2PL 2 2 3/4 x 2 3/4 (B.S.) (Fy=42)	
Top of base Pl	El. 248'-0"	El. 241'-0"	El. 241'-0"	El. 241'-0"	El. 241'-0"	El. 241'-0"	
Base Plate	47 x 5 1/8 x 3'-11"	73 x 9 x 6'-1"	88 x 11 x 7'-4"	83 x 10 1/4 x 6'-11"	83 x 10 1/4 x 6'-11"	79 x 9 3/4 x 6'-7"	

* Provide proper splice pls., bolt holes & finished col. top for future columns. Use upper col. one size smaller except as shown.
▲ See detail on 10-JK4-3 and 4.
■ Splice 3" above slab. See note on 10-JK2-2.
● See detail on 10-JK2-30.

LICENSED PROFESSIONAL ENGINEER LESLIE E. ROBERTSON No. 34360 UNIVERSITY OF THE STATE OF NEW YORK

DRAWN S.C.
REVIEWED E.L.

10-K1-249

WORTHINGTON, SKILLING, HELLE & JACKSON — Civil & Structural Engineers

PROJECT: THE WORLD TRADE CENTER | TITLE: COLUMN SCHEDULE | DATE: 5-15-67

REVISIONS
1-6-69
3-1-69
3-12-69
3-21-69
6-13-69

	K55-51	K55-52	K55-53
El. 332'			
El. 310'			
Street level			
El. 294'	14WF95 (Fy=50)	14WF48 (Fy=50)	
El. 284'			(See 12-JK1-47) 14WF665 (Fy=36)
El. 274'	(See 12-JK1-47) 14WF103 (Fy=50)	14WF61 (Fy=50)	
El. 264'			
El. 253	14WF237 (Fy=50)	14WF103 (Fy=50)	
Top of base Pl	El. 248'-0"	El. 248'-0"	
Base Plate	32 × 3 × 2'-8"	23 × 1¾ × 2'-1"	

LICENSED PROFESSIONAL ENGINEER — LESLIE E. ROBERTSON — No. 34360 — UNIVERSITY OF THE STATE OF NEW YORK

DRAWN S.C.
REVIEWED E.L.

* Provide proper splice pls., bolt holes & finished col. top for future columns. Use upper col. one size smaller except as shown.
▲ See detail on 10-JK4-3 and 4.
■ Splice 3" above slab. See note on 10-JK2-2.
● See detail on 10-JK2-30.

10-K1-250

WORTHINGTON, SKILLING, HELLE & JACKSON Civil & Structural Engineers

PROJECT THE WORLD TRADE CENTER | TITLE COLUMN SCHEDULE | DATE 5-15-67

REVISIONS
12-17-68

	K5G-1	K5G-2
El. 332'		
El. 310'	10-JK2-17	10-JK2-17
El. 294'	14WF500 (Fy=50)	14WF455 (Fy=50)
El. 284'		
El. 274'	Temp. bracing 14WF500 (Fy=50)	Temp. bracing 14WF550 (Fy=50)
El. 264'	▲	▲
El. 253	14WF550 (Fy=50)	14WF550 (Fy=50)
Top of base PL	El. 247'-0"	El. 247'-0"
Base Plate	67×8×5'-7"	67×8×5'-7"

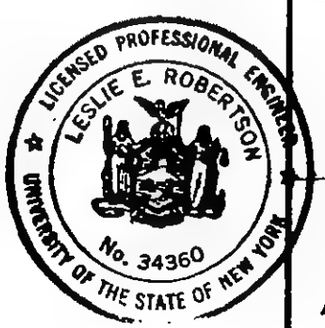

✱ Provide proper splice pls., bolt holes & finished col. top for future columns. Use upper col. one size smaller except as shown.
▲ See detail on 10-JK4-3 and 4.
■ Splice 3" above slab. See note on 10-JK2-2.
● See detail on 10-JK2-30.

10-K1-251

WORTHINGTON, SKILLING, HELLE & JACKSON — Civil & Structural Engineers

PROJECT: THE WORLD TRADE CENTER | TITLE: COLUMN SCHEDULE | DATE: 5-15-67

REVISIONS
6-11-68
6-28-68

	K56-51	K56-52	K56-53				
El. 332'							
El. 310'							
El. 294'							
El. 284'	14 WF 184 (Fy=50)						
El. 274'							
El. 264'	14 WF 314 (Fy=50)	#2 Girder	#2 Girder				
El. 253 ▲	14 WF 314 (Fy=50)	14 WF 111 (Fy=50)	14 WF 176				
Top of base Pl	El. 241'-0"	El. 243'-4"	El. 243'-4"				
Base Plate	50 x 5 3/8 x 4'-5"	28 x 2 3/8 x 2'-5"	37 x 3 5/8 x 3'-3"				

* Provide proper splice pls., bolt holes & finished col. top for future columns. Use upper col. one size smaller except as shown.
▲ See detail on 10-JK4-3 and 4.
■ Splice 3" above slab. See note on 10-JK2-2.
● See detail on 10-JK2-30.

LICENSED PROFESSIONAL ENGINEER — LESLIE E. ROBERTSON — No. 34360 — UNIVERSITY OF THE STATE OF NEW YORK

10-K1-252

3

WORTHINGTON, SKILLING, HELLE & JACKSON — Civil & Structural Engineers

PROJECT: THE WORLD TRADE CENTER | TITLE: COLUMN SCHEDULE | DATE: 5-15-67

REVISIONS
10-15-68
1-6-69
3-1-69
3-12-69
3-21-69
11-27-72

	K57-1	K57-2	K57-3	K57-4	K57-5	K57-6	K57-7
El. 332'							
El. 310'		14WF500 (Fy=50) ■ See Dwg Book 13		■ See D.B. 13	■ See D.B. 13	■ See D.B. 13	
El. 294'	1'-0" ℄ Girder 8'-8"	El. 303'-8" 1'-0" ℄ Girder 8'-8"	1'-0" ℄ Girder 8'-8"	Part of truss KT-3	14WF320 +℄ 22x1⅝ (B.S.) (Fy=42)	14WF455 (Fy=50) 14WF320 +℄ 22x1½ (B.S.) (Fy=42) 36WF (12-JK1-84)	
El. 284'	14WF342 (Fy=50)		14WF370 (Fy=50)	14WF320 (Fy=50)			
El. 274'	14WF370 (Fy=50)	14WF95 (Fy=50)	14WF398 (Fy=50)	14WF342 (Fy=50)	14WF320 +℄ 22x2 (B.S.) (Fy=42)	14WF320 +℄ 22x1¾ (B.S.) (Fy=42)	
El. 264'		See Detail 10-JK2-35		14WF550 (Fy=50)			
El. 253	▲		▲	▲	▲	▲	
Top of base ℄	14WF500 (Fy=50) El. 248'-0"		14WF455 (Fy=50) El. 241'-0"	14WF320 +℄ 22x2½ (B.S.) (Fy=42) El. 241'-0"	14WF320 +℄ 22x2⅝ (B.S.) (Fy=42) El. 241'-0"	14WF320 +℄ 22x2⅝ (B.S.) (Fy=42) El. 241'-0"	
Base Plate	62 x 7¼ x 5'-2"		66 x 8 x 5'-6"	75 x 9¼ x 6'-3"	78 x 9¾ x 6'-6"	76 x 9¼ x 6'-4"	

* Provide proper splice pls., bolt holes & finished col. top for future columns. Use upper col. one size smaller except as shown.
▲ See detail on 10-JK4-3 and 4.
■ Splice 3" above slab. See note on 10-JK2-2.
● See detail on 10-JK2-30.

LICENSED PROFESSIONAL ENGINEER ★ LESLIE E. ROBERTSON ★ No. 34360 ★ UNIVERSITY OF THE STATE OF NEW YORK

DRAWN S.C.
REVIEWED E.L.

10-K1-253

WORTHINGTON, SKILLING, HELLE & JACKSON — Civil & Structural Engineers

PROJECT: THE WORLD TRADE CENTER | TITLE: COLUMN SCHEDULE | DATE: 5-15-67

REVISIONS
6-11-68
10-15-68
1-6-69
3-1-69
3-12-69
3-21-69

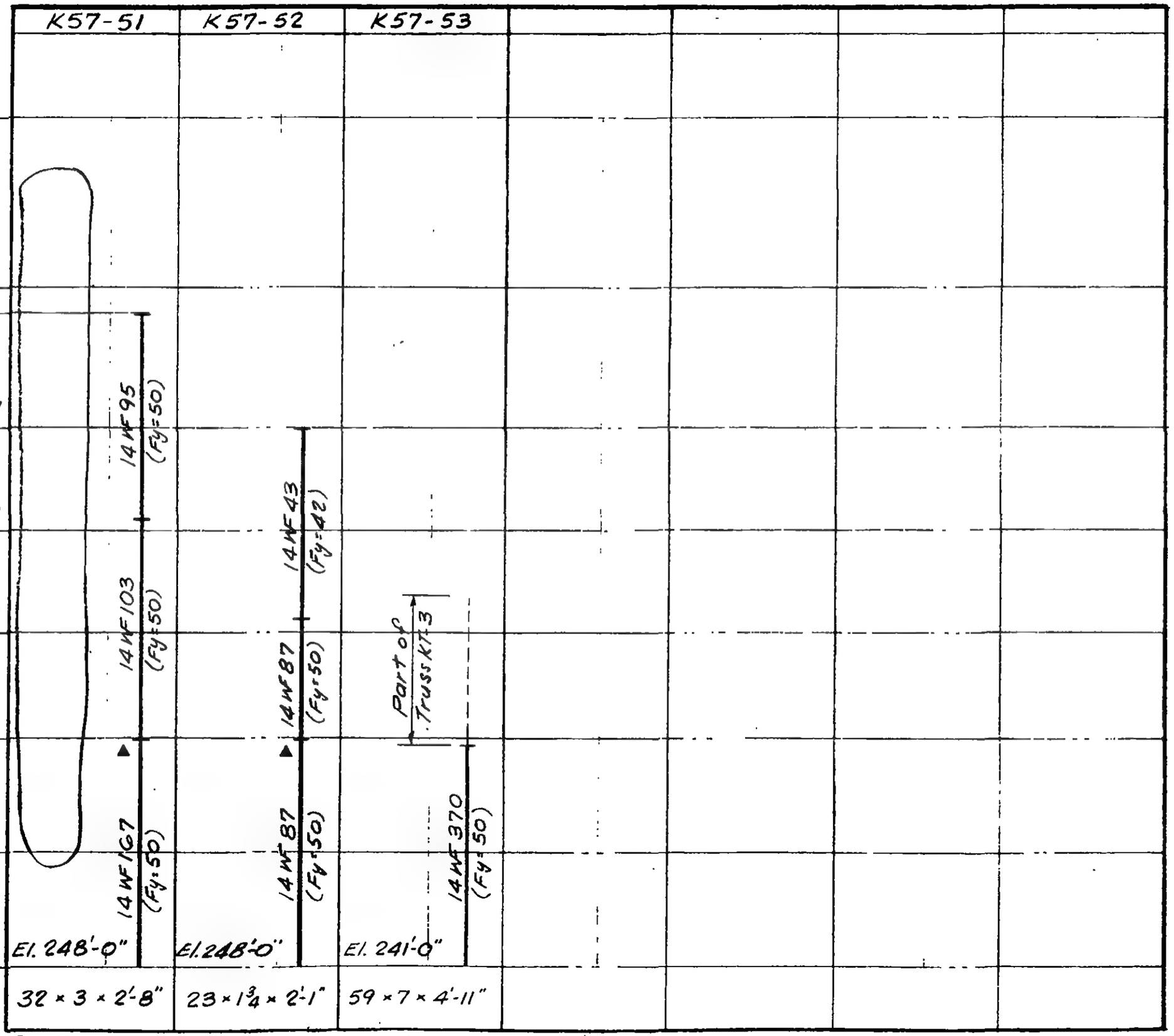

LICENSED PROFESSIONAL ENGINEER
LESLIE E. ROBERTSON
No. 34360
UNIVERSITY OF THE STATE OF NEW YORK

DRAWN S.C.
REVIEWED E.L.

* Provide proper splice pls., bolt holes & finished col. top for future columns. Use upper col. one size smaller except as shown.
▲ See detail on 10-JK4-3 and 4.
■ Splice 3" above slab. See note on 10-JK2-2.
● See detail on 10-JK2-30.

10-K1-254

WORTHINGTON, SKILLING, HELLE & JACKSON — Civil & Structural Engineers

PROJECT: THE WORLD TRADE CENTER | TITLE: COLUMN SCHEDULE | DATE: 5-15-67

REVISIONS
6-11-68

	K58-1	K58-2	K58-3	K58-4	K58-5	K58-6	K58-7
El. 332'							
El. 310'							
Street							
El. 294'	14 WF 176 (FY = 50)	14 WF 176 (FY = 50)	14 WF 176 (FY = 50)	14 WF 176 (FY = 50)	14 WF 176 (FY = 50)	14 WF 176 (FY = 50)	14 WF 176 (FY = 50)
El. 284'							
El. 274'							
El. 264'	14 WF 246 (FY = 50)	14 WF 246 (FY = 50)	14 WF 246 (FY = 50)	14 WF 342 (FY = 50)	14 WF 342 (FY = 50)	12 Girder 14 WF 228 (FY = 50)	14 WF 342 (FY = 50)
El. 253	▲ 14 WF 287 (FY = 50)	▲ 14 WF 287 (FY = 50)	▲ 14 WF 287 (FY = 50)	▲ 14 WF 342 (FY = 50)	▲ 14 WF 342 (FY = 50)		▲ 14 WF 342 (FY = 50)
Top of base Pl	El. 241'-0"	El. 241'-0"	El. 241'-0"	El. 244'-0"	El. 244'-0"		El. 244'-0"
Base Plate	51 x 6¼ x 4'-7"	51 x 6¼ x 4'-7"	51 x 6¼ x 4'-7"	47 x 5⅜ x 4'-3"	47 x 5 x 4'-3"		47 x 5 x 4'-3"

* Provide proper splice pls., bolt holes & finished col. top for future columns. Use upper col. one size smaller except as shown.
▲ See detail on 10-JK4-3 and 4.
■ Splice 3" above slab. See note on 10-JK2-2.
● See detail on 10-JK2-30.

10-K1-255

LICENSED PROFESSIONAL ENGINEER — LESLIE E. ROBERTSON — No. 34360 — UNIVERSITY OF THE STATE OF NEW YORK

A

WORTHINGTON, SKILLING, HELLE & JACKSON — Civil & Structural Engineers

PROJECT: THE WORLD TRADE CENTER | TITLE: COLUMN SCHEDULE | DATE: 5-15-67

REVISIONS
6-11-68
6-28-68
9-4-68

	K58-8	K58-9	K58-10				
El. 332'							
El. 310'							
El. 294'	14 WF 184 (Fy = 50)	14 WF 142 (Fy = 50)	14 WF 103 (Fy = 50)				
El. 284'							
El. 274'							
El. 264'	R girder 14 WF 237 (Fy = 50)	14 WF 314 (Fy = 50) ▲	14 WF 228 (Fy = 50) ▲				
El. 253							
Top of base PL		14 WF 314 (Fy = 50) El. 247'-0"	14 WF 228 (Fy = 50) El. 247'-0"				
Base Plate		44 x 4 7/8 x 3'-11"	37 x 3 5/8 x 3'-4"				

* Provide proper splice pls., bolt holes & finished col. top for future columns. Use upper col. one size smaller except as shown.
▲ See detail on 10-JK4-3 and 4.
■ Splice 3" above slab. See note on 10-JK2-2.
● See detail on 10-JK2-30.

LICENSED PROFESSIONAL ENGINEER — LESLIE E. ROBERTSON — No. 34360 — UNIVERSITY OF THE STATE OF NEW YORK

10-K1-256

6

A

WORTHINGTON, SKILLING, HELLE & JACKSON — Civil & Structural Engineers

PROJECT: THE WORLD TRADE CENTER | TITLE: COLUMN SCHEDULE | DATE: 5-15-67

REVISIONS
6-11-68

	K58-51	K58-52	K58-53	K58-54	K58-55		
El. 332'							
El. 310'							
El. 294'							
El. 284'							
El. 274'							
El. 264'	12 Girder	12 Girder	12 Girder	12 Girder	12 Girder		
El. 253	14 WF 119 (Fy = 50)	14 WF 119 (Fy = 50)	14 WF 228 (Fy = 50)	14 WF 176 (Fy = 50)	14 WF 150 (Fy = 50)		
Top of base ℄	El. 241'-0"	El. 243'-4"	El. 243'-4"	El. 243'-4"	El. 243'-4"		
Base Plate	33 × 3 1/8 × 2'-11"	29 × 2 1/2 × 2'-7"	39 × 4 × 3'-6"	37 × 3 5/8 × 3'-3"	33 × 3 × 2'-11"		

* Provide proper splice pls., bolt holes & finished col. top for future columns. Use upper col. one size smaller except as shown.
▲ See detail on 10-JK4-3 and 4.
■ Splice 3" above slab. See note on 10-JK2-2.
● See detail on 10-JK2-30.

LICENSED PROFESSIONAL ENGINEER ★ LESLIE E. ROBERTSON ★ No. 34360 ★ UNIVERSITY OF THE STATE OF NEW YORK

10-K1-257

7

A

WORTHINGTON, SKILLING, HELLE & JACKSON — Civil & Structural Engineers

PROJECT: THE WORLD TRADE CENTER | TITLE: COLUMN SCHEDULE | DATE: 5-15-67

'SIONS
6-11-68
9-4-68

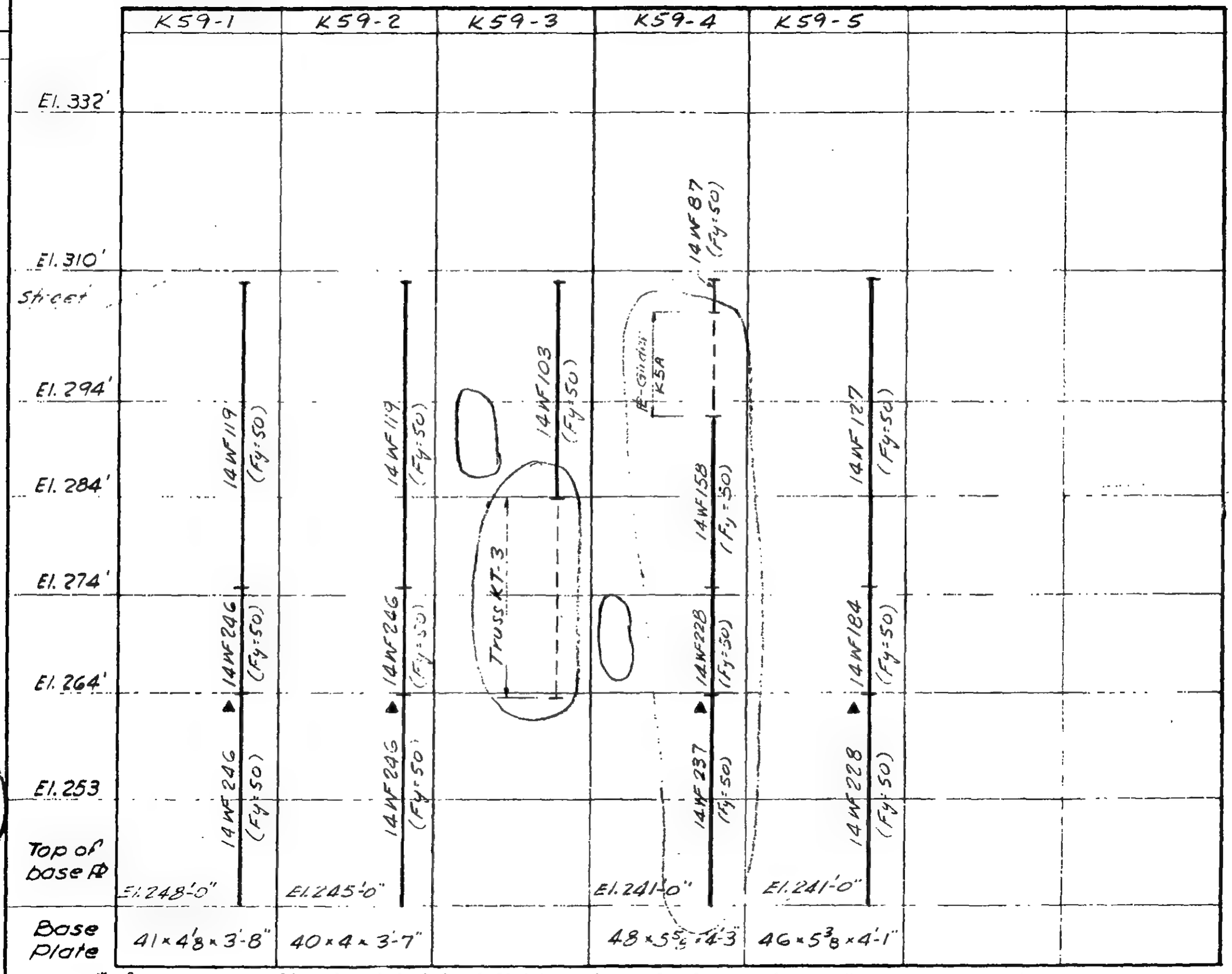

✱ Provide proper splice pls., bolt holes & finished col. top for future columns. Use upper col. one size smaller except as shown.
▲ See detail on 10-JK4-3 and 4.
■ Splice 3" above slab. See note on 10-JK2-2.
● See detail on 10-JK2-30.

10-K1-258

WORTHINGTON, SKILLING, HELLE & JACKSON — Civil & Structural Engineers

PROJECT: THE WORLD TRADE CENTER | TITLE: COLUMN SCHEDULE | DATE: 5-15-67

REVISIONS
6-11-68

	K-59-51
El. 332'	
El. 310'	
Street	
El. 294'	14WF78 (Fy=42)
El. 284'	
El. 274'	
El. 264'	▲ 14WF158 (Fy=50)
El. 253	14WF158 (Fy=50)
Top of base Pl	El. 248'-0"
Base Plate	31" x 27"8 x 2'-10"

* Provide proper splice pls., bolt holes & finished col. top for future columns. Use upper col. one size smaller except as shown.
▲ See detail on 10-JK4-3 and 4.
■ Splice 3" above slab. See note on 10-JK2-2.
● See detail on 10-JK2-30.

LICENSED PROFESSIONAL ENGINEER — LESLIE E. ROBERTSON — No. 34360 — UNIVERSITY OF THE STATE OF NEW YORK

10-K1-259

8

A

WORTHINGTON, SKILLING, HELLE & JACKSON — Civil & Structural Engineers

PROJECT: THE WORLD TRADE CENTER | TITLE: COLUMN SCHEDULE | DATE: 5-15-67

REVISIONS
6-11-68

	KGO-1	KGO-2	KGO-3	KGO-4	KGO-5	KGO-6	KGO-7
El. 332'							
El. 310'							
Street							
El. 294'							
El. 284'	14WF111 (Fy=50)	14WF111 (Fy=50)	14WF111 (Fy=50)	14WF111 (Fy=50)	14WF111 (Fy=50)	14WF119 (Fy=50)	14WF119 (Fy=50)
El. 274'							
El. 264'	14WF167 (Fy=50)	14WF167 (Fy=50)	14WF142 (Fy=50)	14WF237 (Fy=50)	14WF237 (Fy=50)	14WF176 (Fy=50)	14WF264 (Fy=50)
El. 253	▲ 14WF211 (Fy=50)	▲ 14WF211 (Fy=50)	℄ Girder	▲ 14WF237 (Fy=50)	▲ 14WF237 (Fy=50)	℄ Girder	▲ 14WF264 (Fy=50)
Top of base Pl	El. 241'-0"	El. 241'-0"		El. 244'-0"	El. 244'-0"		El. 244'-0"
Base Plate	44 × 4 5/8 × 3'-11"	44 × 4 7/8 × 3'-10"		40 × 4 × 3'-7"	40 × 4 × 3'-7"		41 × 4 5/8 × 3'-8"

✱ Provide proper splice pls., bolt holes & finished col. top for future columns. Use upper col. one size smaller except as shown.
▲ See detail on 10-JK4-3 and 4.
■ Splice 3" above slab. See note on 10-JK2-2.
● See detail on 10-JK2-30.

LICENSED PROFESSIONAL ENGINEER — LESLIE E. ROBERTSON — No. 34360 — UNIVERSITY OF THE STATE OF NEW YORK

10-K1-260

WORTHINGTON, SKILLING, HELLE & JACKSON — Civil & Structural Engineers

PROJECT: THE WORLD TRADE CENTER | TITLE: COLUMN SCHEDULE | DATE: 5-15-67

REVISIONS
6-11-68
9-4-68

	K60-8	K60-9	K60-10	K60-11
El. 332'				
El. 310'				
El. 294' Street	14WF119 (Fy=50)	14WF127 (Fy=50)	14WF127 (Fy=50)	14WF136 (Fy=50)
El. 284'				
El. 274'				
El. 264'	14WF167 (Fy=50)	14WF287 (Fy=50)	14WF287 (Fy=50)	14WF287 (Fy=50)
El. 253	12 Girder	▲ 14WF287 (Fy=50)	▲ 14WF287 (Fy=50)	▲ 14WF287 (Fy=50)
Top of base Pl		El. 243'-4"	El. 247'-0"	El. 247'-0"
Base Plate		43 × 4 3/8 × 3'-10"	43 × 4 3/4 × 3'-10"	44 × 4 7/8 × 3'-11"

* Provide proper splice pls., bolt holes & finished col. top for future columns. Use upper col. one size smaller except as shown.
▲ See detail on 10-JK4-3 and 4.
■ Splice 3" above slab. See note on 10-JK2-2.
● See detail on 10-JK2-30.

LICENSED PROFESSIONAL ENGINEER — LESLIE E. ROBERTSON — No. 34360 — UNIVERSITY OF THE STATE OF NEW YORK

10-K1-261

WORTHINGTON, SKILLING, HELLE & JACKSON Civil & Structural Engineers

PROJECT THE WORLD TRADE CENTER | TITLE COLUMN SCHEDULE | DATE 5-15-67

REVISIONS

6-11-68

		K60-52	K60-53	K60-54	K60-55	K60-56	K60-57
El. 332'							
El. 310'							
El. 294'							
El. 284'							
El. 274'							
El. 264'		PL Girder	PL Girder	PL Girder	PL Girder	PL Girder	PL Girder
El. 253		14WF176 (Fy=50)	14WF103 (Fy=50)	14WF150 (Fy=50)	14WF119 (Fy=50)	14WF78 (Fy=42)	14WF78 (Fy=42)
Top of base PL		El. 244'-0"	El. 243'-6"	El. 243'-10"	El. 243'-4"	El. 243'-4"	El. 243'-4"
Base Plate		37×3⅝×3'-3"	26×2⅝×2'-7"	33×3×2'-11"	29×2½×2'-7"	19×1½×1'-10"	19×1½×1'-10"

✱ Provide proper splice pls., bolt holes & finished col. top for future columns. Use upper col. one size smaller except as shown.
▲ See detail on 10-JK4-3 and 4.
■ Splice 3" above slab. See note on 10-JK2-2.
● See detail on 10-JK2-30.

10-K1-262

LICENSED PROFESSIONAL ENGINEER LESLIE E. ROBERTSON No. 34360 UNIVERSITY OF THE STATE OF NEW YORK

WORTHINGTON, SKILLING, HELLE & JACKSON — Civil & Structural Engineers

PROJECT: THE WORLD TRADE CENTER | TITLE: COLUMN SCHEDULE | DATE: 5-15-67

REVISIONS
6-11-68
9-4-68

	KG1-1	KG1-2	KG1-3	KG1-4	KG1-5	KG1-6	KG1-7
El. 332'							
El. 310'					14WF87 (Fy-50)		
El. 294'				14WF87 (Fy-50)	B-Girder K5A		
El. 284'	14WF87 (Fy-50)	14WF103 (Fy-50)	14WF87 (Fy-50)			14WF103 (Fy-50)	14WF103 (Fy-50)
El. 274'				Truss KT-3	See Detail 10-JK2-35 14WF95 (Fy-50)		
El. 264'	14WF158 (Fy-50)	14WF228 (Fy-50)	14WF193 (Fy-50)			14WF228 (Fy-50)	14WF228 (Fy-50)
El. 253	▲ 14WF158 (Fy-50)	▲ 14WF228 (Fy-50)	▲ 14WF193 (Fy-50)	14WF211 (Fy-50)		See Detail 10-JK4-48 ▲ 14WF228 (Fy-50)	▲ 14WF228 (Fy-50)
Top of base Pl	El. 248'-0"	El. 248'-0"	El. 248'-0"	El. 246'-0"		El. 245'-0"	El. 244'-4"
Base Plate	31 × 2 7/8 × 2'-10"	37 × 3 5/8 × 3'-4"	35 × 3 3/8 × 3'-1"	42 × 4 × 3'-6"		39 × 3 7/8 × 3'-6"	37 × 3 5/8 × 3'-4"

* Provide proper splice pls., bolt holes & finished col. top for future columns. Use upper col. one size smaller except as shown.
▲ See detail on 10-JK4-3 and 4.
■ Splice 3" above slab. See note on 10-JK2-2.
● See detail on 10-JK2-30.

LICENSED PROFESSIONAL ENGINEER ★ LESLIE E. ROBERTSON ★ No. 34360 ★ UNIVERSITY OF THE STATE OF NEW YORK

10-K1-264

WORTHINGTON, SKILLING, HELLE & JACKSON — Civil & Structural Engineers

PROJECT: THE WORLD TRADE CENTER | TITLE: COLUMN SCHEDULE | DATE: 5-15-67

REVISIONS
6-11-68

	KG1-8	KG1-9	KG1-10
El. 332'			
El. 310'			
Street			
El. 294'			
El. 284'	14WF103 (Fy=50)	14WF103 (Fy=50)	14WF111 (Fy=50)
El. 274'			
El. 264'	14WF150 (Fy=50)	14WF150 (Fy=50)	14WF237 (Fy=50)
El. 253	12 Girder	12 Girder	▲ 14WF237 (Fy=50)
Top of base Pl			El. 243'-4"
Base Plate			39 × 4 × 3'-6"

* Provide proper splice pls., bolt holes & finished col. top for future columns. Use upper col. one size smaller except as shown.
▲ See detail on 10-JK4-3 and 4.
■ Splice 3" above slab. See note on 10-JK2-2.
● See detail on 10-JK2-30.

LICENSED PROFESSIONAL ENGINEER — LESLIE E. ROBERTSON — No. 34360 — UNIVERSITY OF THE STATE OF NEW YORK

10-K1-265

WORTHINGTON, SKILLING, HELLE & JACKSON — Civil & Structural Engineers

PROJECT: THE WORLD TRADE CENTER | TITLE: COLUMN SCHEDULE | DATE: 5-15-67

REVISIONS
6-11-68
9-4-68

	KG1-51	KG1-52	KG1-53	KG1-54
El. 332'				
El. 310' street				
El. 294'		℄ Girder K5A		
El. 284'		14WF167 (Fy=50)	14WF103 (Fy=50)	14WF103 (Fy=50)
El. 274'	Part of Truss KT-3			
El. 264'		14WF314 (Fy=50)	14WF228 (Fy=50)	14WF228 (Fy=50)
El. 253	14WF87 (Fy=50)	14WF314 (Fy=50) ▲	14WF228 (Fy=50) ▲	14WF228 (Fy=50) ▲
Top of base ℄	El. 245'-0"	El. 245'-0"	El. 244'-7"	El. 243'-4"
Base Plate	27 × 2¼ × 2'-3"	45 × 4⅝ × 3'-9"	37 × 3⅝ × 3'-4"	39 × 4 × 3'-6"

※ Provide proper splice pls., bolt holes & finished col. top for future columns. Use upper col. one size smaller except as shown.
▲ See detail on 10-JK4-3 and 4.
■ Splice 3" above slab. See note on 10-JK2-2.
● See detail on 10-JK2-30.

10-K1-266

LICENSED PROFESSIONAL ENGINEER — LESLIE E. ROBERTSON — No. 34360 — UNIVERSITY OF THE STATE OF NEW YORK

WORTHINGTON, SKILLING, HELLE & JACKSON — Civil & Structural Engineers

PROJECT: THE WORLD TRADE CENTER | TITLE: COLUMN SCHEDULE | DATE: 5-15-67

REVISIONS
6-11-68
9-4-68

	K62-1	K62-2	K62-3	K62-4	K62-5	K62-6	
El. 332'							
El. 310'							
Street							
El. 294'							
El. 284'	14 WF 111 (Fy = 50)	14 WF 111 (Fy = 50)	14 WF 111 (Fy = 50)	14 WF 111 (Fy = 50)	14 WF 119 (Fy = 50)	14 WF 78 (Fy = 50)	
El. 274'							
El. 264'	℄ Girder 14 WF 150 (Fy = 50)	14 WF 237 (Fy = 50)	14 WF 246 (Fy = 50)	14 WF 246 (Fy = 50)	14 WF 264 (Fy = 50)	14 WF 167 (Fy = 50)	
El. 253							
Top of base ℄		14 WF 237 ▲ (Fy = 50) El. 247'-0"	14 WF 246 ▲ (Fy = 50) El. 247'-0"	14 WF 246 ▲ (Fy = 50) El. 244'-0"	14 WF 264 ▲ (Fy = 50) El. 247'-0"	14 WF 167 ▲ (Fy = 50) El. 247'-0"	
Base Plate		40 × 4 × 3'-7"	40 × 4 × 3'-7"	40 × 4 × 3'-7"	41 × 4 × 3'-8	32 × 3 × 2'-10"	

* Provide proper splice pls., bolt holes & finished col. top for future columns. Use upper col. one size smaller except as shown.
▲ See detail on 10-JK4-3 and 4.
■ Splice 3" above slab. See note on 10-JK2-2.
● See detail on 10-JK2-30.

LICENSED PROFESSIONAL ENGINEER — LESLIE E. ROBERTSON — No. 34360 — UNIVERSITY OF THE STATE OF NEW YORK

16

10-K1-267

WORTHINGTON, SKILLING, HELLE & JACKSON — Civil & Structural Engineers

PROJECT: THE WORLD TRADE CENTER | TITLE: COLUMN SCHEDULE | DATE: 5-15-67

REVISIONS
6-11-68

	K62-51						
El. 332'							
El. 310'							
El. 294'							
El. 284'							
El. 274'							
El. 264'							
El. 253	L2 Girder						
Top of base Pl	14 WF 150 (Fy = 50)						
El. 243'-4"							
Base Plate	34 × 3¼ × 3'-0"						

* Provide proper splice pls., bolt holes & finished col. top for future columns. Use upper col. one size smaller except as shown.
▲ See detail on 10-JK4-3 and 4.
■ Splice 3" above slab. See note on 10-JK2-2.
● See detail on 10-JK2-30.

10-K1-268

LICENSED PROFESSIONAL ENGINEER — LESLIE E. ROBERTSON — No. 34360 — UNIVERSITY OF THE STATE OF NEW YORK

17

A

WORTHINGTON, SKILLING, HELLE & JACKSON — Civil & Structural Engineers

PROJECT: THE WORLD TRADE CENTER | TITLE: COLUMN SCHEDULE ZONE K2 | DATE: 5-15-67

REVISIONS
6-7-68

			K70-3	K70-4	K70-5	K70-6	K70-7
El. 332'							
El. 310'							
El. 290'			14WF211 (Fy=50)	14WF237 (Fy=50)	14WF228 (Fy=50)	14WF237 (Fy=50)	14 WF 142 (Fy = 50)
El. 279'3"			+	+	+	+	+
El. 264'			14WF342 (Fy=50)	14WF342 (Fy=50)	14WF370 (Fy=50)	14WF370 (Fy=50)	14WF264 (Fy=50)
El. 253							
Top of Base Pl. at El. 241'							
Base Plate			51×5⅞×4'-7"	53×6½×4'-9"	53×6½×4'-9"	57×6¾×5'-1"	50×6×4'-5"

* Provide proper splice pls., bolt holes & finished col. top for future columns. Use upper col. one size smaller except as shown.
▲ See detail on 10-JK4-3 and 4.
■ Splice 3" above slab. See note on 10-JK2-2.
● See detail on 10-JK2-30.

10-K1-269

C

WORTHINGTON, SKILLING, HELLE & JACKSON — Civil & Structural Engineers

PROJECT: THE WORLD TRADE CENTER | TITLE: COLUMN SCHEDULE | DATE: 5-15-67

REVISIONS
6-7-68
6-28-68

	K71-8	K71-9	K71-10	K71-11	K71-12	K71-13	
El. 332'							
El. 310'							
El. 290'	14 WF 228 (Fy=50)	14 WF 246 (Fy=50)	14 WF 264 (Fy=50)	14 WF 211 (Fy=50)	14 WF 193 (Fy=50)	14 WF 95 (Fy=50)	
El. 279'-3"							
El. 264'	14 WF 550 (Fy=50)	14 WF 550 (Fy=50)	14 WF 550 (Fy=50) ▲	14 WF 455 (Fy=50) ▲	14 WF 426 (Fy=50)	14 WF 264 (Fy=50)	
El. 253							
Top of Base Pl. at El. 241'							
Base Plate	55 × 6½ × 4'-11"	57 × 6¾ × 5'-1"	59 × 7 × 5'-5"	55 × 6½ × 5'-0"	49 × 5⅝ × 4'-5"	38 × 3¾ × 3'-4"	

* Provide proper splice pls., bolt holes & finished col. top for future columns. Use upper col. one size smaller except as shown.
▲ See detail on 10-JK4-3 and 4.
■ Splice 3" above slab. See note on 10-JK2-2.
● See detail on 10-JK2-30.

LICENSED PROFESSIONAL ENGINEER — LESLIE E. ROBERTSON — No. 34360 — UNIVERSITY OF THE STATE OF NEW YORK

10-K1-270

WORTHINGTON, SKILLING, HELLE & JACKSON — Civil & Structural Engineers

PROJECT: THE WORLD TRADE CENTER | TITLE: COLUMN SCHEDULE Zone K-2 | DATE: 5-15-67

REVISIONS
6-7-68
6-28-68

	K72-13	K72-14	K72-15	K72-16	K72-17	K72-18
El. 332'						
El. 310'						
El. 290'				14WF211 (Fy=50)	14WF193 (Fy=50)	14WF127 (Fy=50)
El. 279'-3"	14WF78 (Fy=42)	14WF78 (Fy=42)	14WF211 (Fy=50)			
El. 264'	Temp. bracing	Temp. bracing		14WF455 (Fy=50)	14WF426 (Fy=50)	14WF314 (Fy=50)
El. 253	20x12 I 2-12x5 1-12 10x3 (Fy=50)	20x12 I 2-12x5 1-12 10x3 (Fy=50)	14WF211 (Fy=50) ▲	14WF455 (Fy=50) ▲	14WF426 (Fy=50) ▲	14WF314 (Fy=50) ▲
Top of Base Pl.	El. 243'-4"	El. 243'-4"	El. 243'-4"	El. 243'-4"	El. 243'-4"	El. 243'-4"
Base Plate	39x4½x3'-5"	39x4½x3'-5"	39x3¾x3'-5"	53x6x4'-9"	49x5⅝x4'-5"	42x4⅝x3'-8"

LICENSED PROFESSIONAL ENGINEER — LESLIE E. ROBERTSON — No. 34360 — UNIVERSITY OF T...

✱ Provide proper splice pls., bolt holes & finished col. top for future columns. Use upper col. one size smaller except as shown.
▲ See detail on 10-JK4-3 and 4.
■ Splice 3" above slab. See note on 10-JK2-2.
● See detail on 10-JK2-30.

10-K1-271

WORTHINGTON, SKILLING, HELLE & JACKSON — Civil & Structural Engineers

PROJECT: THE WORLD TRADE CENTER | TITLE: COLUMN SCHEDULE | DATE: 5-15-67

REVISIONS
6-7-68
6-28-68

	K73-13	K73-14	K73-15	K73-16	K73-17	K73-18	K73-19
El. 332'							
El. 310'							
El. 290'	14 WF 264 (Fy=50)	14 WF 264 (Fy=50)	14 WF 287 (Fy=50)		14 WF 264 (Fy=50)		14 WF 193 (Fy=50)
El. 279'-3"	⊠	⊠					
El. 264'	Temp. Bracing	Temp. Bracing	Temp. Bracing	14 WF 314 (Fy=50)	14 WF 167 (Fy=50)		
El. 253	20 x 12 II 2 PL 12x5 2 PL 10x4 (Fy=50)	20 x 12 II 2 PL 12x5 2 PL 10x4 (Fy=50)	14 WF 426 (Fy=50)	14 WF 167 (Fy=50)	14 WF 550 (Fy=50)	14 WF 87 (Fy=50)	14 WF 455 (Fy=50)
Top of Base Pl.	El. 243'-4"	El. 243'-4"	El. 243'-4"	El. 243'-4"	El. 243'-4"	El. 243'-4"	El. 243'-4"
Base Plate	57 x 7¾ x 5'-1"	57 x 7¾ x 5'-0"	59 x 7 x 5'-5"	33 x 3⅛ x 2'-11"	53 x 6 x 4'-10"	22 x 2¾ x 2'-0"	51 x 5⅞ x 4'-6"

LICENSED PROFESSIONAL ENGINEER — LESLIE E. ROBERTSON — No. 34360 — UNIVERSITY OF THE STATE OF NEW YORK

* Provide proper splice pls., bolt holes & finished col. top for future columns. Use upper col. one size smaller except as shown.
▲ See detail on 10-JK4-3 and 4.
■ Splice 3" above slab. See note on 10-JK2-2.
● See detail on 10-JK2-30.

⊠ Splice detail see 10-JK2-35A

10-K1-272

WORTHINGTON, SKILLING, HELLE & JACKSON — Civil & Structural Engineers

PROJECT: THE WORLD TRADE CENTER | TITLE: COLUMN SCHEDULE | DATE: 5-15-67

REVISIONS
6-7-68
6-28-68

	K74-12	K74-13	K74-14	K74-15	K74-16	K74-17	K74-18
El. 332'							
El. 310'							
El. 290'	14 WF 176 (Fy=50)	14 WF 176 (Fy=50)	14 WF 237 (Fy=50)		14 WF 314 (Fy=50)		14 WF 167 (Fy=50)
El. 279'-3"	detail 10 10-JK2-41	detail 10 10-JK2-41					
El. 264'	Temp. Bracing	Temp. Bracing	14 WF 500 (Fy=50)	14 WF 184 (Fy=50)	14 WF 605 (Fy=46)	14 WF 87 (Fy=50)	14 WF 370 (Fy=50)
El. 253	20 x 12 I 2 12x5 1 12 10x3 (Fy=50)	20 x 12 I 2 12x5 1 12 10x3 (Fy=50)	14 WF 500 (Fy=50)	14 WF 184 Fy=50	14 WF 605 (Fy=46)	14 WF 87 (Fy=50)	14 WF 370 (Fy=50)
Top of Base Pl.	El. 243'-4"	El. 243'-4"	El. 243'-4"	El. 243'-4"	El. 243'-4"	El. 243'-4"	El. 243'-4"
Base Plate	50 x 6¼ x 4'-5"	51 x 6¼ x 4'-7"	55 x 6½ x 5'-0"	34 x 3⅜ x 2'-11"	59 x 7 x 5'-5"	22 x 2½ x 2'-0"	46 x 4¾ x 4'-1"

* Provide proper splice pls., bolt holes & finished col. top for future columns. Use upper col. one size smaller except as shown.
▲ See detail on 10-JK4-3 and 4.
■ Splice 3" above slab. See note on 10-JK2-2.
● See detail on 10-JK2-30.

10-K1-274

LICENSED PROFESSIONAL ENGINEER — LESLIE E. ROBERTSON — No. 34360 — UNIVERSITY OF THE STATE OF NEW YORK

WORTHINGTON, SKILLING, HELLE & JACKSON — Civil & Structural Engineers

PROJECT: THE WORLD TRADE CENTER | TITLE: COLUMN SCHEDULE | DATE: 5-15-67

REVISIONS
6-7-68
6-28-68

	K 74-19
El. 332'	
El. 310'	
El. 290'	14 WF 95 (Fy=50)
El. 279'3"	
El. 264'	14 WF 264 (Fy=50)
El. 253	▲ 14 WF 264 (Fy=50)
Top of Base Pl.	El. 243'-4"
Base Plate	38 x 3¾ x 3'-4"

✱ Provide proper splice pls., bolt holes & finished col. top for future columns. Use upper col. one size smaller except as shown.
▲ See detail on 10-JK4-3 and 4.
■ Splice 3" above slab. See note on 10-JK2-2.
● See detail on 10-JK2-30.

10-K1-275

LICENSED PROFESSIONAL ENGINEER — LESLIE E. ROBERTSON — No. 34360 — UNIVERSITY OF THE STATE OF NEW YORK

C

WORTHINGTON, SKILLING, HELLE & JACKSON Civil & Structural Engineers

PROJECT THE WORLD TRADE CENTER | TITLE COLUMN SCHEDULE | DATE 5-15-67

REVISIONS
6-7-68
6-28-68

	K75-16	K75-17	K75-18	K75-19	K75-20	K75-21	K75-22
El. 332'							
El. 310'							
El. 290'	14 WF 176 (Fy = 50)	14 WF 119 (Fy = 50)			14 WF 167 (Fy = 50)	14 WF 184 (Fy = 50)	14 WF 103 (Fy = 50)
El. 279'-3"	detail 10 / 10-JK2-41	detail 11 / 10-JK2-41					
El. 264'	Temp. Bracing	Temp. Bracing	14 WF 211 (Fy = 50)	14 WF 211 (Fy = 50)	Temp. Bracing 14 WF 211 (Fy = 50)	Temp Bracing 14 WF 228 (Fy = 50)	14 WF 264 (Fy = 50)
El. 253	20 x 12 I, 2 PL 5 12 x 5, 1 PL 10 x 3 (Fy = 50)	20 x 12 I, 2 PL 5 12 x 5, 1 PL 10 x 3 (Fy = 50)	14 WF 211 (Fy = 50)	14 WF 211 (Fy 50)	14 WF 287 (Fy = 50)	14 WF 287 (Fy = 50)	14 WF 264 (Fy = 50)
Top of Base Pl.	El. 243'-4"	El. 243'-4"	El. 243'-4"	El. 243'-4"	El. 243'-4"	El. 243'-4"	El. 243'-4"
Base Plate	49 x 6¼ x 4'-7"	44 x 6 x 3'-10"	39 x 3¾ x 3'-5"	39 x 3¾ x 3'-5"	48 x 5⅝ x 4'-3"	49 x 5⅝ x 4'-3"	39 x 3¾ x 3'-5"

✱ Provide proper splice pls., bolt holes & finished col. top for future columns. Use upper col. one size smaller except as shown.
▲ See detail on 10-JK4-3 and 4.
■ Splice 3" above slab. See note on 10-JK2-2.
● See detail on 10-JK2-30.

10-K1-276

LICENSED PROFESSIONAL ENGINEER LESLIE E. ROBERTSON No. 34360 UNIVERSITY OF THE STATE OF NEW YORK

WORTHINGTON, SKILLING, HELLE & JACKSON — Civil & Structural Engineers

PROJECT: THE WORLD TRADE CENTER | TITLE: COLUMN SCHEDULE | DATE: 12-17-68

REVISIONS

	K75-23	K75-54
El. 332'		
El. 310'		
El. 294'	14 WF 119 (Fy = 50)	14 WF 78 (Fy = 50)
El. 284'		
El. 274'	Temp. bracing; 14 WF 167 (Fy = 50)	
El. 264'	▲	
El. 253	14 WF 193 (Fy = 50)	
Top of base Pl	El. 243'-4"	
Base plate	42 × 4⅜ × 3'-6"	

LICENSED PROFESSIONAL ENGINEER — LESLIE E. ROBERTSON — No. 34960 — UNIVERSITY OF THE STATE OF NEW YORK

* Provide proper splice pls., bolt holes & finished col. top for future columns. Use upper col. one size smaller except as shown.
▲ See detail on 10-JK4-3 and 4.
■ Splice 3" above slab. See note on 10-JK2-2.
● See detail on 10-JK2-30.

10-K1-276A

WORTHINGTON, SKILLING, HELLE & JACKSON — Civil & Structural Engineers

PROJECT: THE WORLD TRADE CENTER | TITLE: COLUMN SCHEDULE | DATE: 6-7-68

REVISIONS
6-28-68
9-13-68
10-15-68

	K76-54	K76-55	K76-56	K76-57			
El. 332'							
El. 310'							
El. 290'							
El. 279'-3"							
El. 264'	℄ Girder	℄ Girder	Bott. of girder	Bott. of girder			
El. 253	14 WF 61 (Fy=42)	14 WF 61 (Fy=42)	14 WF 68 (Fy=50)	14 WF 68 (Fy=50)			
Top of Base Pl.	El. 243'-4"	El. 243'-4"	El. 243'-4"	El. 243'-4"			
Base Plate	20 x 1¾ x 2'-0"	20 x 1¾ x 2'-0"	20 x 1¾ x 2'-0"	20 x 1¾ x 2'-0"			

LICENSED PROFESSIONAL ENGINEER — LESLIE E. ROBERTSON — No. 34360 — UNIVERSITY OF THE STATE OF NEW YORK

* Provide proper splice pls., bolt holes & finished col. top for future columns. Use upper col. one size smaller except as shown.
▲ See detail on 10-JK4-3 and 4.
■ Splice 3" above slab. See note on 10-JK2-2.
● See detail on 10-JK2-30.

10-K1-278

WORTHINGTON, SKILLING, HELLE & JACKSON — Civil & Structural Engineers

PROJECT: THE WORLD TRADE CENTER | TITLE: COLUMN SCHEDULE | DATE: 1-17-69

REVISIONS
4-18-69

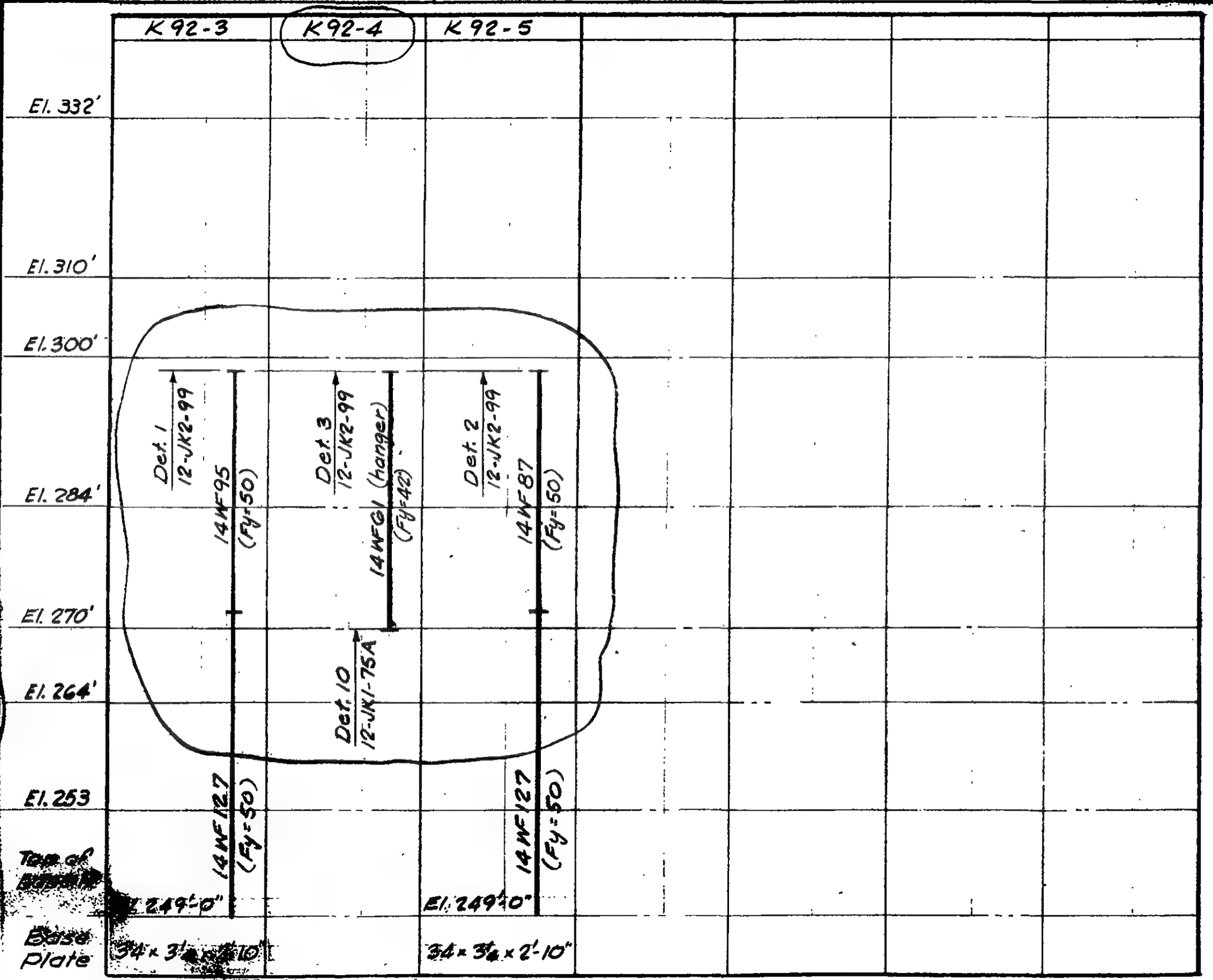

* Provide proper splice pls., bolt holes & finished col. top for future columns. Use upper col. one size smaller except as shown.
▲ See detail on 10-JK4-3 and 4.
■ Splice 3" above slab. See note on 10-JK2-2.
● See detail on 10-JK2-30.

LICENSED PROFESSIONAL ENGINEER — LESLIE E. ROBERTSON — No. 34360 — STATE OF NEW YORK

DRAWN S.C.
REVIEWED

10-K1-279

WORTHINGTON, SKILLING, HELLE & JACKSON — Civil & Structural Engineers

PROJECT: THE WORLD TRADE CENTER

TITLE: COLUMN SCHEDULE - NEW COLUMNS HOTEL AREA

DATE: 12-23-71

REVISIONS: 11-27-72

	H-P1	H-P2	H-P3	H-P4	H-P5	H-P6	H-P7
3'-0" El. 332'	See Dwg. Book 13	See D.B. 13	See D.B. 13	See D.B. 13	See D.B. 13	See D.B. 13	
El. 310'		3'-0" *					
3'-0" El. 294'	*		*	*	*	*	
El. 284'	14WF426 Fy36	14WF426 Fy36	14WF193 Fy36	14WF193 Fy36	14WF455 Fy36	14WF455 Fy36	2" 10-JK5-2 A; Shear studs See 10-JK5-2; 14WF264 Fy36 10-JK5-2 A
3'-0" El. 274'	③	③	③	③	③	③	③ 10-JK5-2 A
El. 264'							10-JK5-2 A
El. 253	14WF500 Fy36	14WF500 Fy36	14WF219 Fy36	14WF219 Fy36	14WF500 Fy36	14WF500 Fy36	14WF264 Fy36
Top of base PL at El. 241'							
Base Plate	60"x6¾"x5'-6" ① Fy36	60"x6¾"x5'-6" ① Fy36	41"x4'8"x3'-8" ① Fy36	41"x4'8"x3'-8" ① Fy36	60"x9½"x5'-6" ①② Fy36	60"x6¾"x5'-6" ① Fy36	45"x4⅝"x4'-0" ① Fy36

* Provide proper splice pls., bolt holes & finished col. top for future columns. See 10-JK2-4.

① See 10-JK3-2

② See Det. B 8-JK5-9.5

③ See 10-JK2-4

LICENSED PROFESSIONAL ENGINEER LESLIE E. ROBERTSON No. 34380 UNIVERSITY OF THE STATE OF NEW YORK

DESIGNED: K. CHIANG

DRAWN: A. [illegible]

10-K1-299

WORTHINGTON, SKILLING, HELLE & JACKSON — Civil & Structural Engineers

PROJECT: THE WORLD TRADE CENTER | TITLE: TYPICAL COLUMN DETAILS | DATE: 5-15-67

REVISIONS

10-20-67
11-8-67
12-13-67
1-5-68
2-16-68
12-3-68
3-1-69

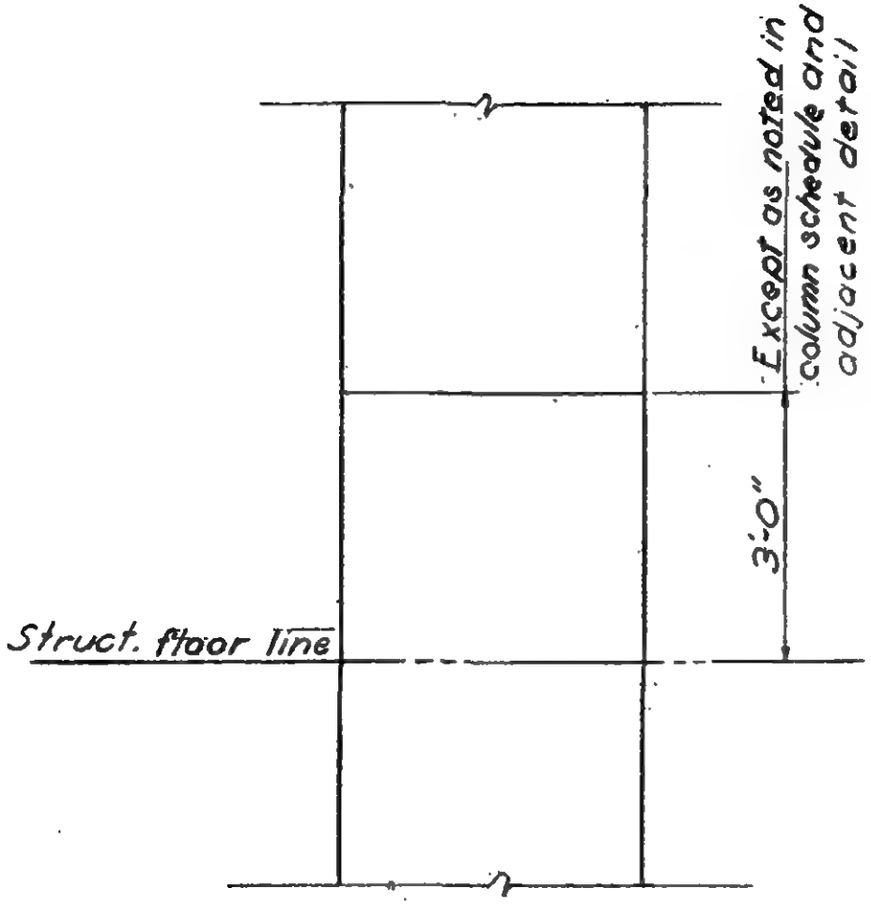

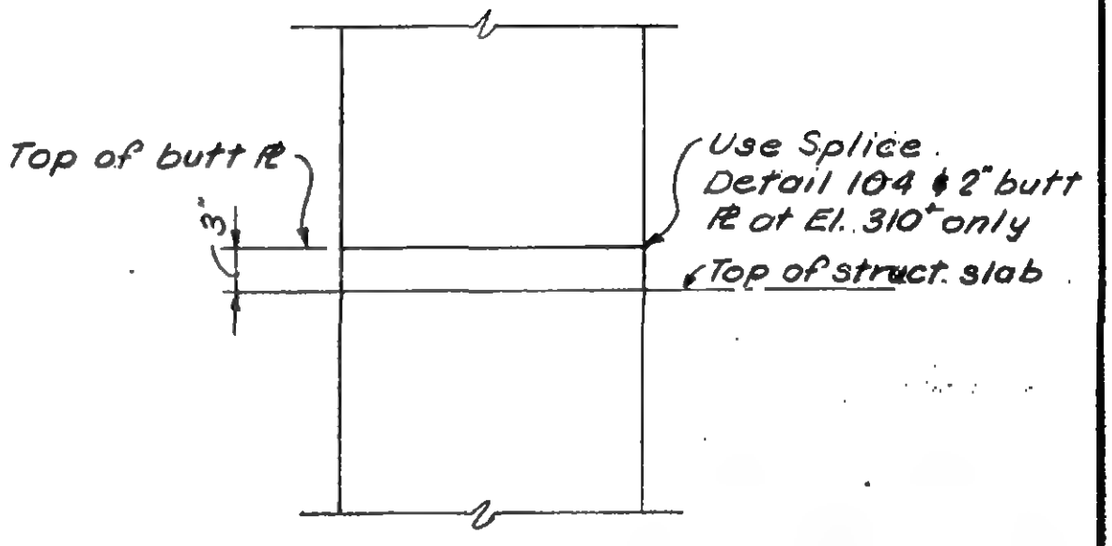

FOR COLUMNS :- J11-1 thru 9
J12-52 & 53
K29-4 (illegible)
K31-3
K31-5 (illegible)
K35-10
K37-10
K41-10
K43-9
K44-1
K45-8
K46-1
K47-8 & 52
K48-1
K50-1
K51-7
K52-1
K53-7
K54-1
K55-6
K57-2,4,5,6

TYPICAL SPLICE LOCATION

DRAWN

CHECKED

10-JR2

WORTHINGTON, SKILLING HELLE & JACKSON Civil & Structural Engineers

PROJECT THE WORLD TRADE CENTER | TITLE TYPICAL COLUMN DETAILS | DATE 5-15-67

REVISIONS

10-20-67

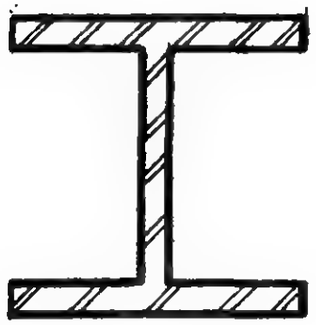

TYPE 100

All splice & material to be A36.
Welding electrodes to be E70 series electrodes.

Bolts to be A325 Friction Type connections.

LICENSED PROFESSIONAL ENGINEER
LESLIE E. ROBERTSON
No. 24260
UNIVERSITY OF THE STATE OF NEW YORK

10-JK2-3

WORTHINGTON, SKILLING, HELLE & JACKSON — Civil & Structural Engineers

PROJECT: THE WORLD TRADE CENTER | TITLE: TYPICAL COLUMN DETAILS | DATE: 5-15-67

REVISIONS
5-26-67
10-20-67
11-8-67
3-17-69
12-23-71

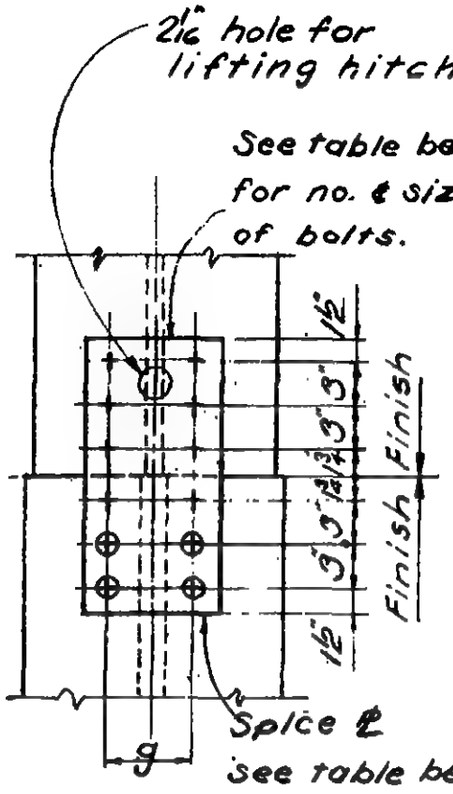

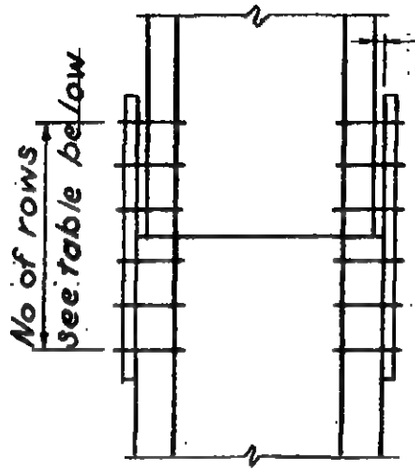

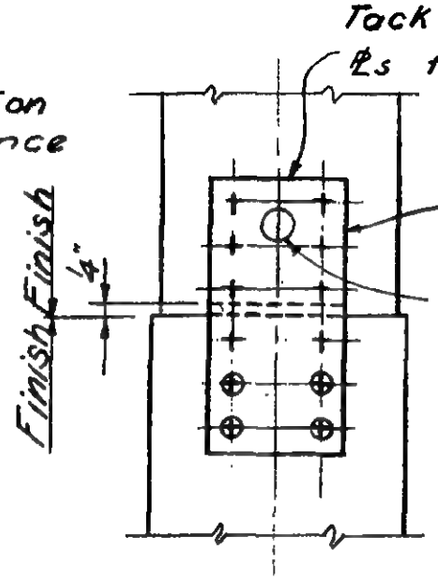

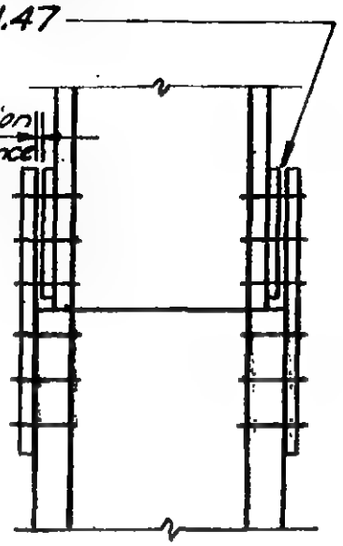

UPPER COLUMN SIZE	No. & Size of BOLTS	No. of ROWS	SPLICES	g
10 WF 112 thru 33	8 - ¾" Ø	4	8 x ⅜	5½
12 WF 190 thru 161 incl.	12 - ¾" Ø	6	9 x ½	5½
133 53	8 - ¾" Ø	4	9 x ⅜	5½
50 40	8 - ¾" Ø	4	8 x ⅜	5½
14 WF 455 thru 370 incl.	20 - ⅞" Ø	10	15 x ⅝	11½
342 287	16 - ⅞" Ø	8	15 x ⅝	11½
264 202	12 - ⅞" Ø	6	15 x ½	11½
193 142	12 - ¾" Ø	6	15 x ½	11½
136 87	12 - ¾" Ø	6	11 x ⅜	5½
84 61	8 - ¾" Ø	4	9 x ⅜	5½
53 43	8 - ¾" Ø	4	8 x ⅜	5½

LICENSED PROFESSIONAL ENGINEER — LESLIE E. ROBERTSON — NEW YORK

SPLICE DETAIL 101

Splice Detail-102 may be used at contractor's option.

10-JK2-4

SKILLING - HELLE - CHRISTIANSEN - ROBERTSON Structural & Civil Engineers

PROJECT THE WORLD TRADE CENTER | TITLE TYPICAL COLUMN DETAILS | DATE 10-20-67

REVISIONS

11-8-67

Width & thickness of splice PL same as shown in table for splice detail 101

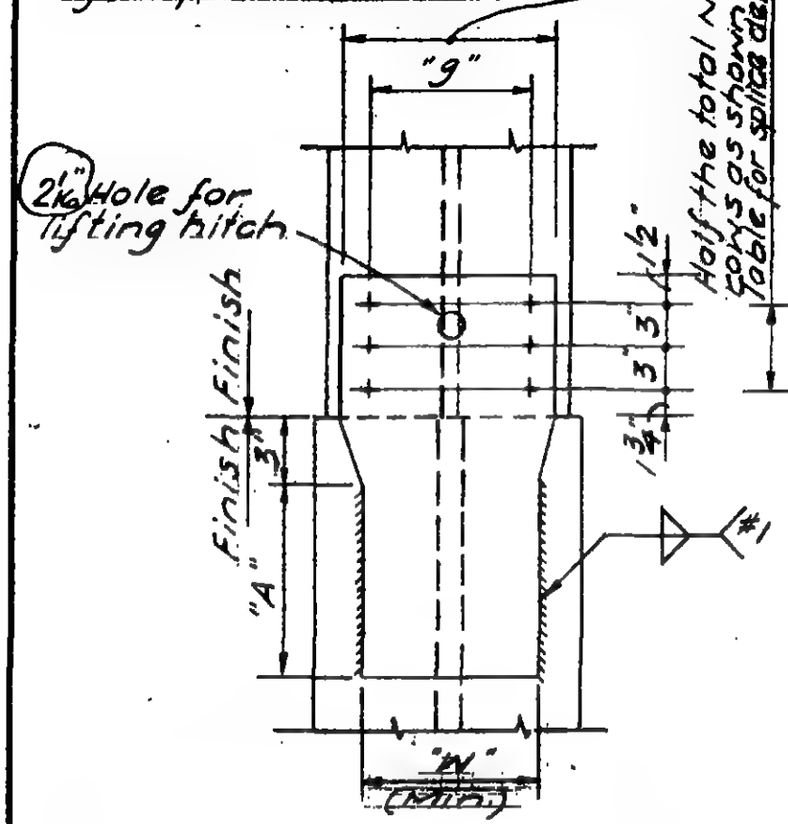

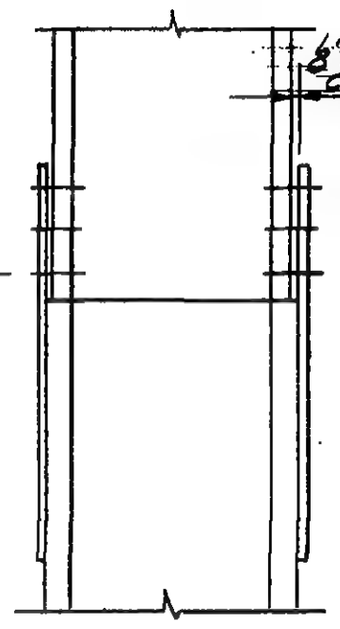

Where fill PL's are req'd increase bolt count by the factor 1.47.

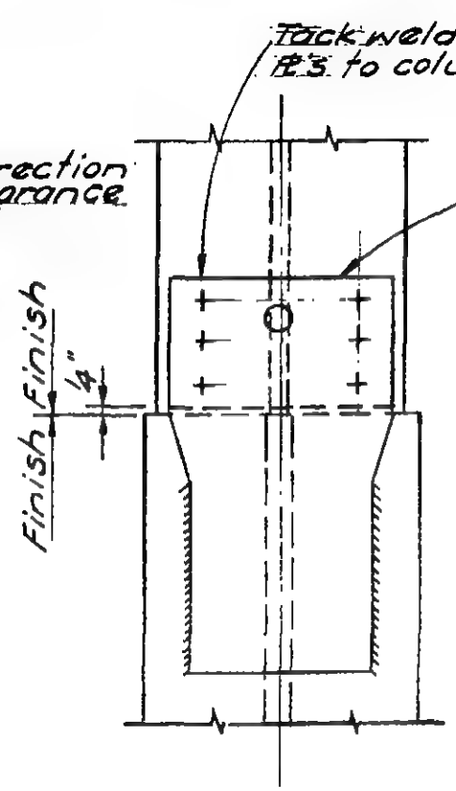

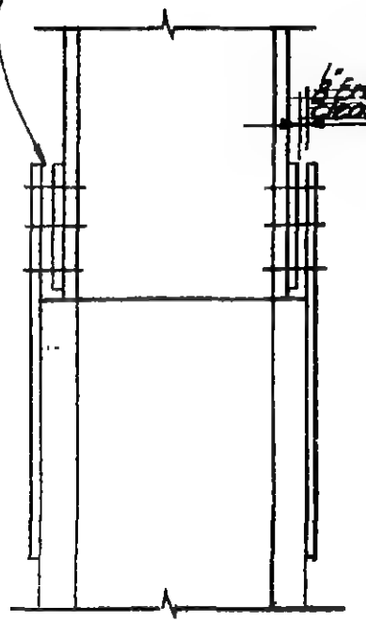

UPPER COLUMN SIZE			Weld #1	"A"	"W"
10WF 33	THRU	66	¼	6"	6"
" 72	"	112	5/16	8	6
12WF 30	THRU	58	¼	10	6
" 65	"	133	5/16	12	8
" 161	"	190	3/8	12	9
14WF 43	THRU	82	¼	8	8
" 61	"	84	¼	12	8
" 87	"	95	¼	15	11
" 111	"	136	5/16	15	11
" 142	"	202	3/8	15	12
" 211	"	264	7/16	15	12
" 287	"	342	½	15	12
" 370	"	426	9/16	15	12

SPLICE DETAIL 102

10-JK2-5

WORTHINGTON, SKILLING, HELLE & JACKSON — Civil & Structural Engineers

PROJECT: THE WORLD TRADE CENTER | TITLE: TYPICAL COLUMN DETAILS | DATE: 5-15-67

REVISIONS
5-26-67
11-8-67
3-13-68
6-17-68

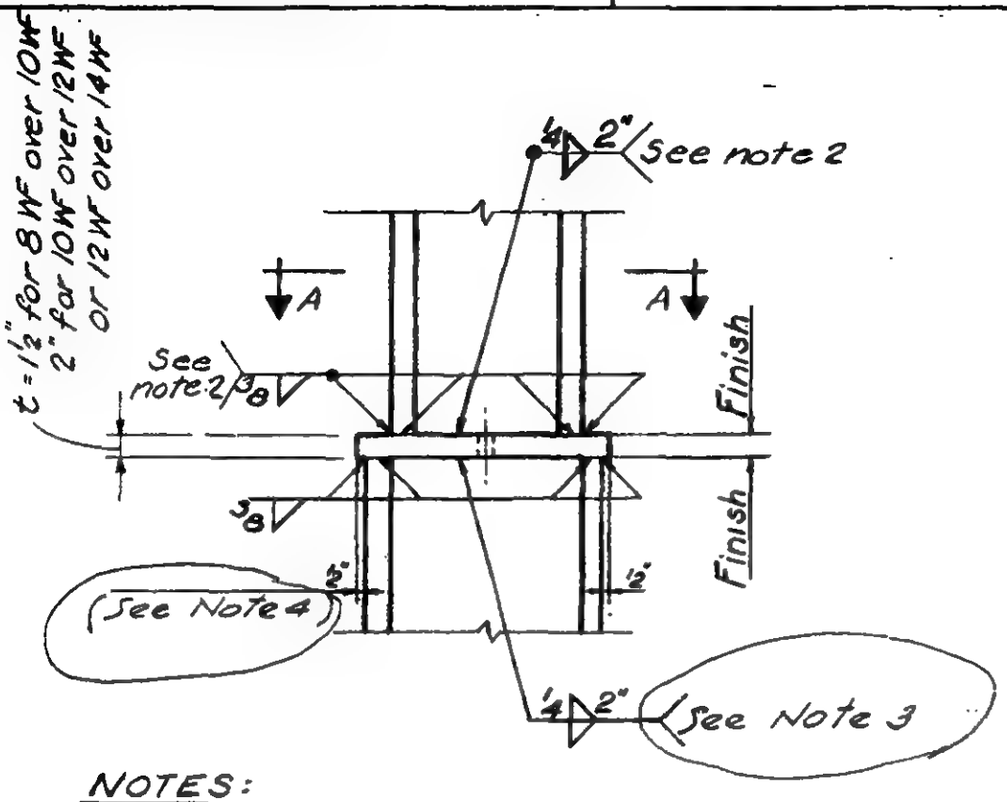

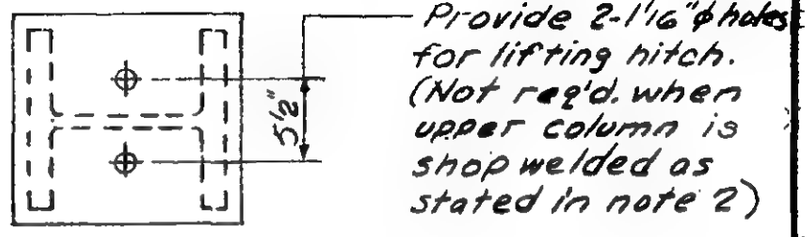

Section A-A

NOTES:

1. Use where upper column is nominally 2" or more smaller than lower column.
2. Shop weld shall be used for column splices at El. 264' as shown on 10-JK4-3 and 4.
3. Full length weld each side of web for columns J3-3, J3-10, J7-2 and J11-1 Thru J11-6 (above El. 310').
4. Butt Pls to be 22½" x 2" x 1'-10½" for c/s. J3-3, J3-10, J7-2, J11-1 and J11-6. (above El. 310').

LICENSED PROFESSIONAL ENGINEER
LESLIE E. ROBERTSON
No. 34560
UNIVERSITY OF THE STATE OF NEW YORK

SPLICE DETAIL 104

10-JK2-7

WORTHINGTON, SKILLING, HELLE & JACKSON — Civil & Structural Engineers

PROJECT: THE WORLD TRADE CENTER | TITLE: TYPICAL COLUMN DETAILS | DATE: 5-15-67

REVISIONS

10-20-67

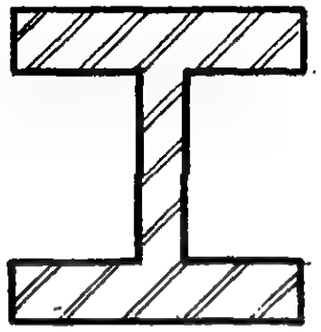

TYPE 110

All splice & materidl to be A36.
Welding electrodes to be E70 series electrodes

Bolts to be A325 Friction type connections.

10-JK2-8

WORTHINGTON, SKILLING, HELLE & JACKSON — Civil & Structural Engineers

PROJECT: THE WORLD TRADE CENTER | TITLE: TYPICAL COLUMN DETAILS | DATE: 5-15-67

REVISIONS
5-26-67
10-20-67
11-8-67

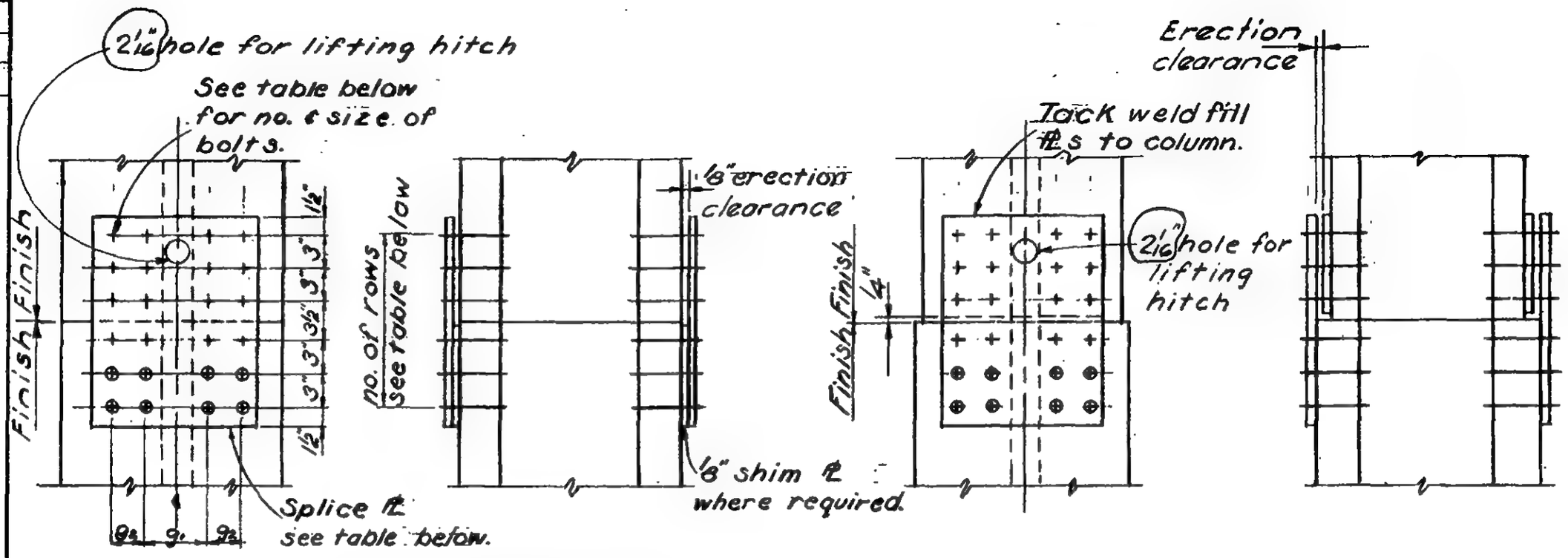

UPPER COL. SIZE	No & SIZE OF BOLTS	No OF ROWS	SPLICE ℄ SIZE	g	g_2
14WF455, 14WF500	20-1"Ø	6	17 x 7/8	5½	3
14WF550, 14WF605	24-1"Ø	6	17 x 7/8	5½	3
14WF665, 14WF730	28-1"Ø	8	17 x 1	7	3

LICENSED PROFESSIONAL ENGINEER — LESLIE E. ROBERTSON — No. 34560 — UNIVERSITY OF THE STATE OF NEW YORK

SPLICE DETAIL III

Splice Detail-112 may be used at contractor's option.

10-JK2-9

SKILLING - HELLE - CHRISTIANSEN - ROBERTSON Structural & Civil Engineers

PROJECT THE WORLD TRADE CENTER | TITLE TYPICAL COLUMN SPLICE DETAIL | DATE 10-20-67

REVISIONS

11-8-67

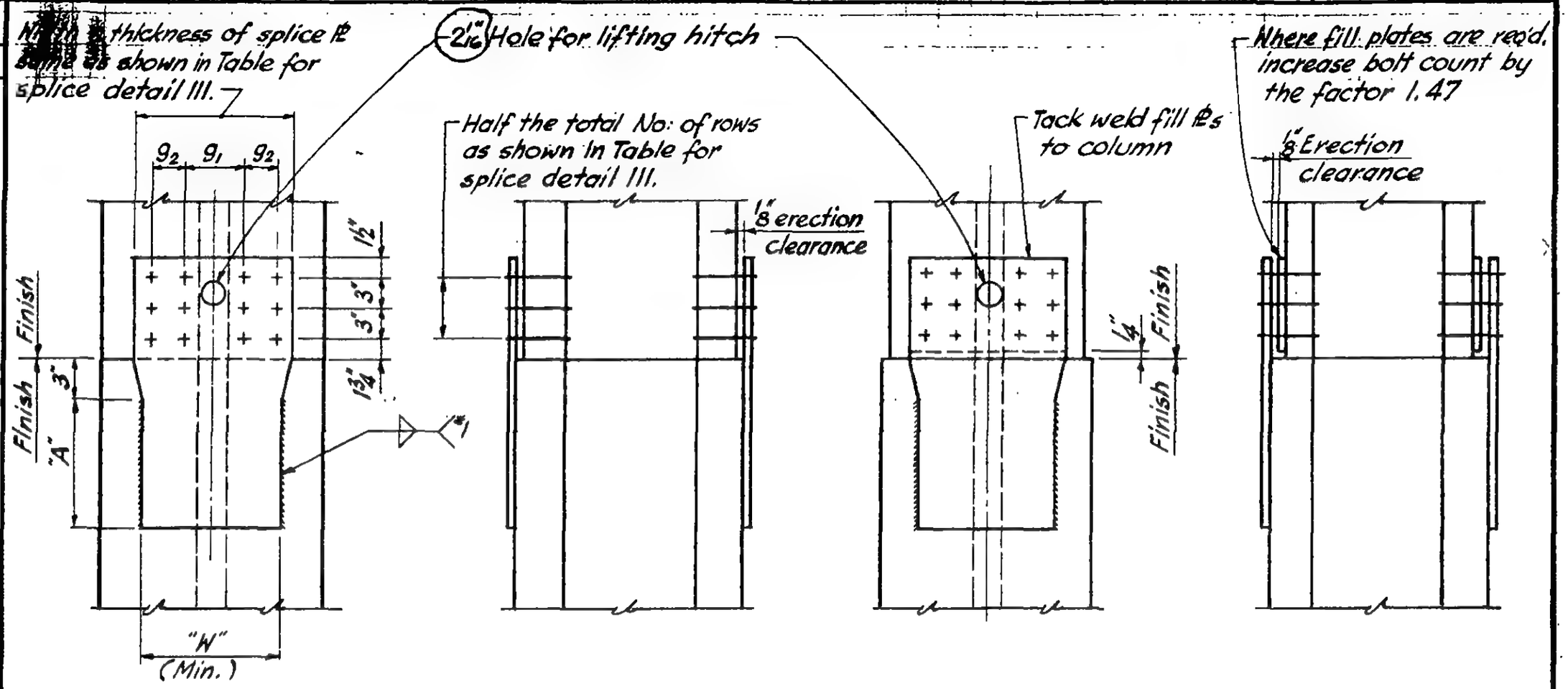

UPPER COL. SIZE	WELD #2	"A"	"W"
14 WF 455 thru 14 WF 500	9/16	18	14
14 WF 550 thru 14 WF 605	5/8	18	14
14 WF 665 thru 14 WF 730	5/8	18	15

LICENSED PROFESSIONAL ENGINEER
LESLIE E. ROBERTSON
No. 34560
UNIVERSITY OF THE STATE OF NEW YORK

SPLICE DETAIL 112

10-JK2-10

WORTHINGTON, SKILLING, HELLE & JACKSON — Civil & Structural Engineers

PROJECT: THE WORLD TRADE CENTER | TITLE: TYPICAL COLUMN DETAILS | DATE: 5-15-67

REVISIONS

10-20-67

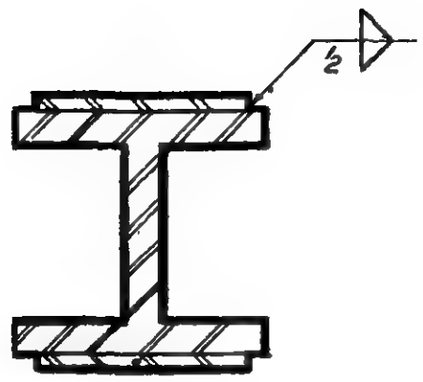

TYPE 200

All splice & material to be A36.
Welding electrodes to be E70 series electrodes

Bolts to be A325, Friction type connections.

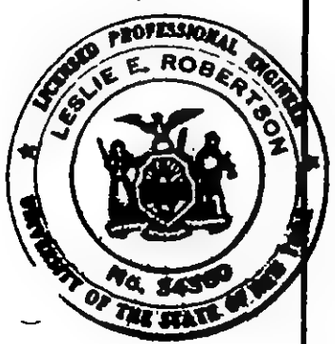

10-JK2-12

SKILLING - HELLE - CHRISTIANSEN - ROBERTSON Structural & Civil Engineers

PROJECT THE WORLD TRADE CENTER | TITLE TYPICAL COLUMN DETAILS | DATE 5-15-67

REVISIONS

3-13-68

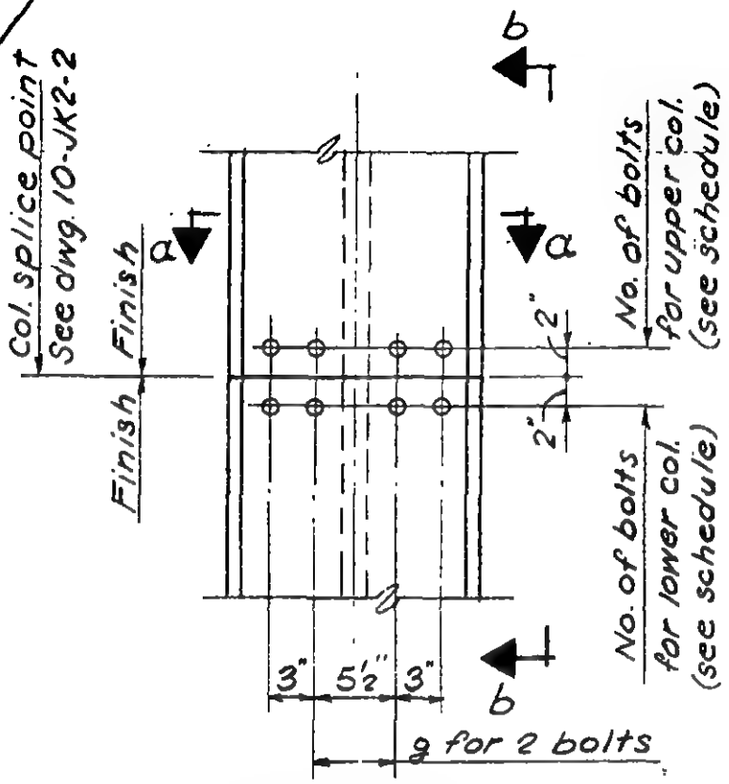

Elevation b-b

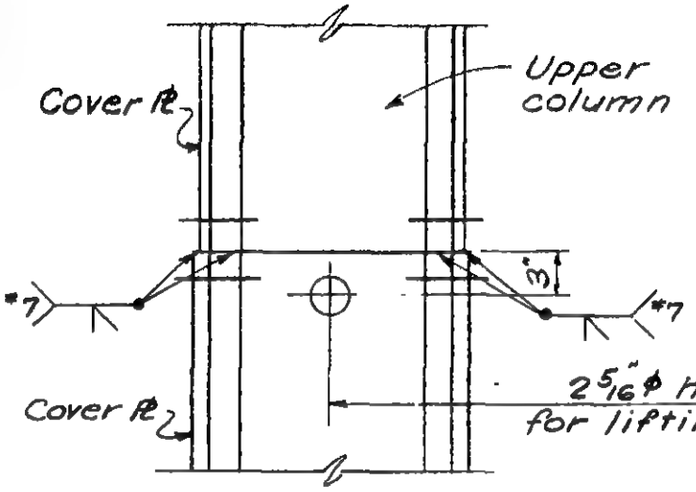

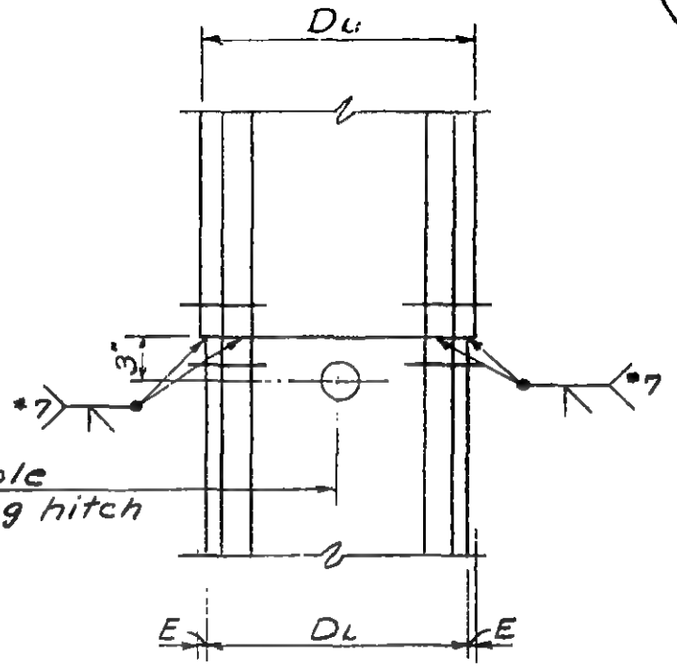

Elevation b-b
where Du > DL

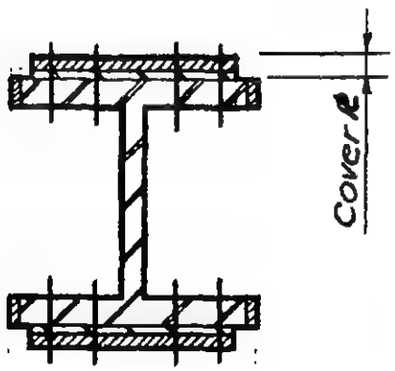

Section a-a

COLUMN SECTION (14 WF 320)		
COVER PL THICK.	*WELD #7	No. & SIZE OF BOLTS
1" thru 1¼"	1" P.P.	2 - ¾" ϕ
1⅜" thru 1¾"	1 1/16"	2 - ¾" ϕ
1⅞" thru 2½"	1⅛"	4 - ¾" ϕ
2⅝" thru 3⅛"	1 3/16"	4 - ¾" ϕ
3¼" thru 3⅝"	1¼"	4 - ¾" ϕ

NOTES:
1. All bolts shown to be A325 H.S. friction type (shop bolted).
2. * size of weld #7 is governed by cover PL thickness of upper col. Where Du > DL, add E to depth of weld #7.

LICENSED PROFESSIONAL ENGINEER
LESLIE E. ROBERTSON
No. 34360
UNIVERSITY OF THE STATE OF NEW YORK

SPLICE DETAIL 201

10-JK2-13

SKILLING - HELLE - CHRISTIANSEN - ROBERTSON Structural & Civil Engineers

PROJECT THE WORLD TRADE CENTER | TITLE TYPICAL COLUMN DETAILS | DATE 5-15-67

REVISIONS
10-20-67
3-13-68

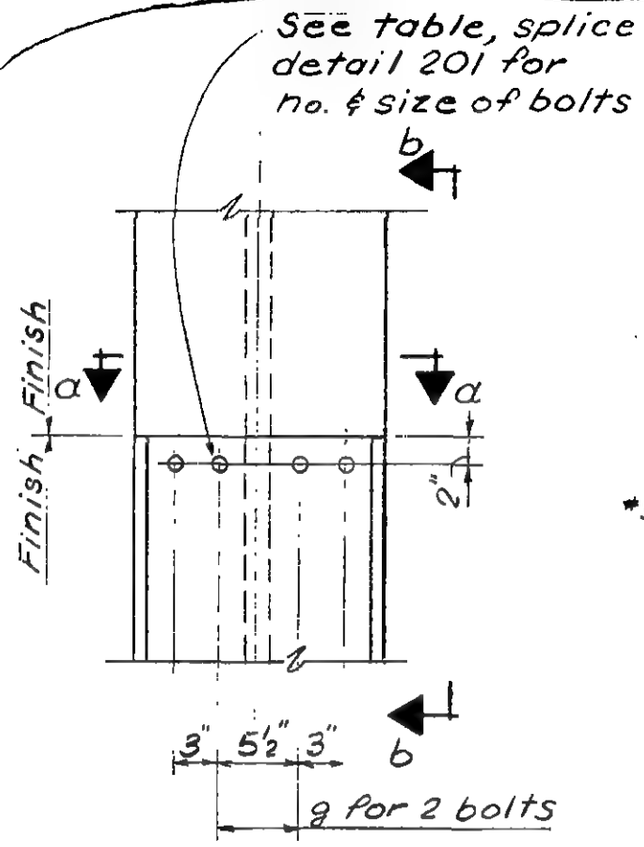

Elevation b-b

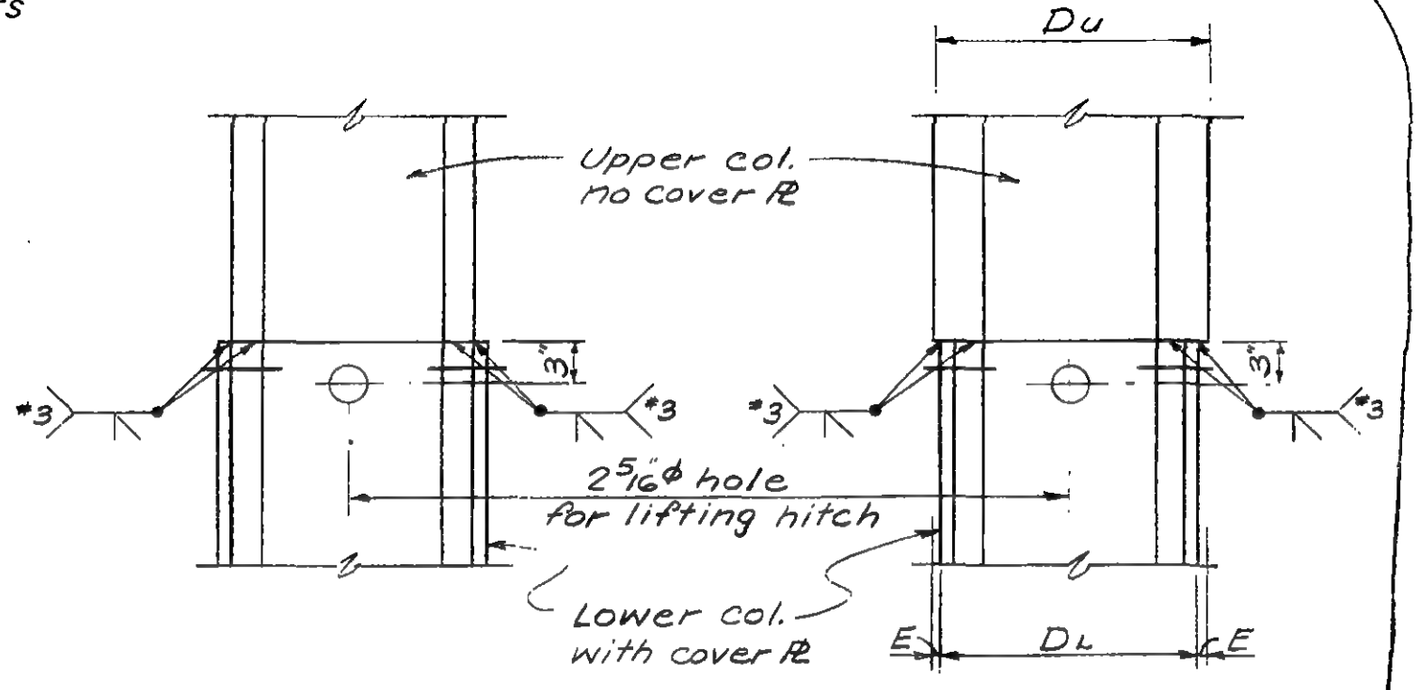

Elevation b-b
where Du > DL

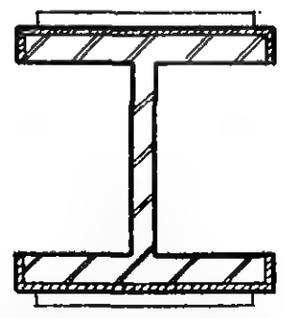

Section a-a

FLANGE THICKNESS OF UPPER COL.	* WELD *3
11/16" & less	C.P.
3/4" - 15/16"	5/8" P.P.
1" - 1 1/4"	11/16"
1 5/16" - 1 9/16"	3/4"
1 5/8" - 2 1/16"	13/16"
2 1/8" - 2 9/16"	7/8"
2 5/8" - 3 1/16"	15/16"
3 1/8" - 3 7/16"	1"
3½" - 4"	1 1/16"
4 1/16" - 4 5/8"	1 1/8"

NOTE:
1. * Where Du > DL, add E to depth of weld *3

LICENSED PROFESSIONAL ENGINEER
LESLIE E. ROBERTSON
No. 34360
UNIVERSITY OF THE STATE OF NEW YORK

SPLICE DETAIL 202

10-JK2-14

SKILLING - HELLE - CHRISTIANSEN - ROBERTSON Structural & Civil Engineers

PROJECT THE WORLD TRADE CENTER | TITLE TYPICAL COLUMN DETAIL | DATE 3-13-68

REVISIONS

Top of column or column assembly where no splice PL is used.

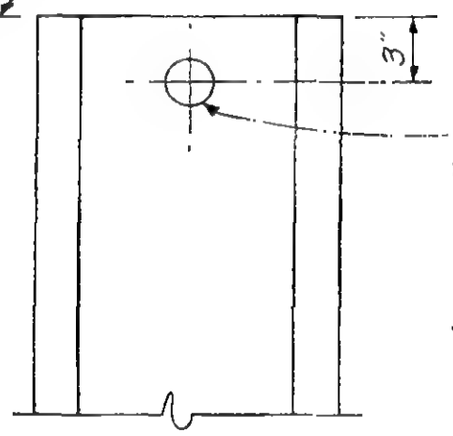

Provide 2 5/16" ϕ hole thru web for lifting hitch. Typical at top of all columns or column assemblies, unless shown otherwise in Detail Drawings.

LICENSED PROFESSIONAL ENGINEER
LESLIE E. ROBERTSON
No. 34360
UNIVERSITY OF THE STATE OF NEW YORK

10-JK2-15

SKILLING - HELLE - CHRISTIANSEN - ROBERTSON Structural & Civil Engineers

PROJECT THE WORLD TRADE CENTER | TITLE TYPICAL DETAIL OF BUILT-UP COLUMNS | DATE 6-7-68

REVISIONS

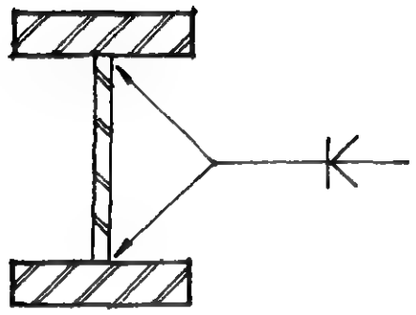

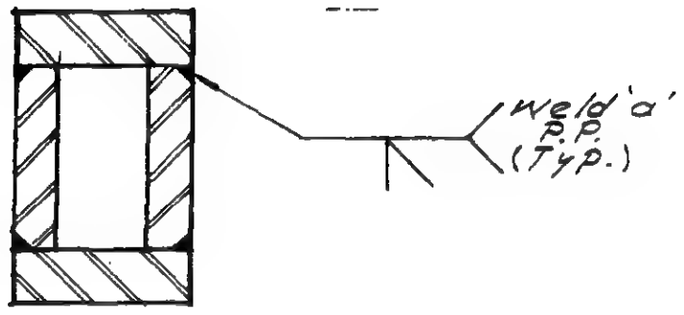

NOTE:
Size of weld 'a' not less than $D = \sqrt{\frac{T}{6}} + \frac{1}{4}$ (min. 1")
Where T = thickness of thinner R at the joint.

10-JK2-16

SKILLING - HELLE - CHRISTIANSEN - ROBERTSON Structural & Civil Engineers

PROJECT THE WORLD TRADE CENTER | TITLE COLUMN SPLICE DETAIL | DATE 6-17-68

REVISIONS
11-5-68
3-17-69

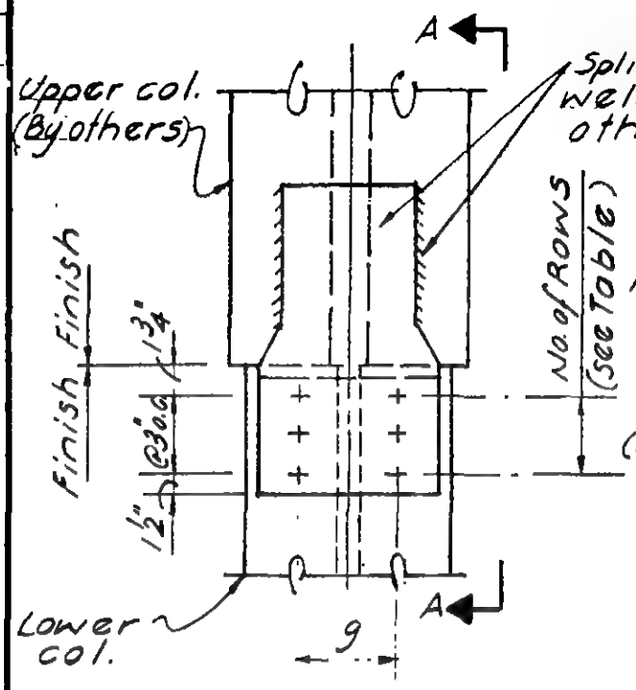

TYPE A

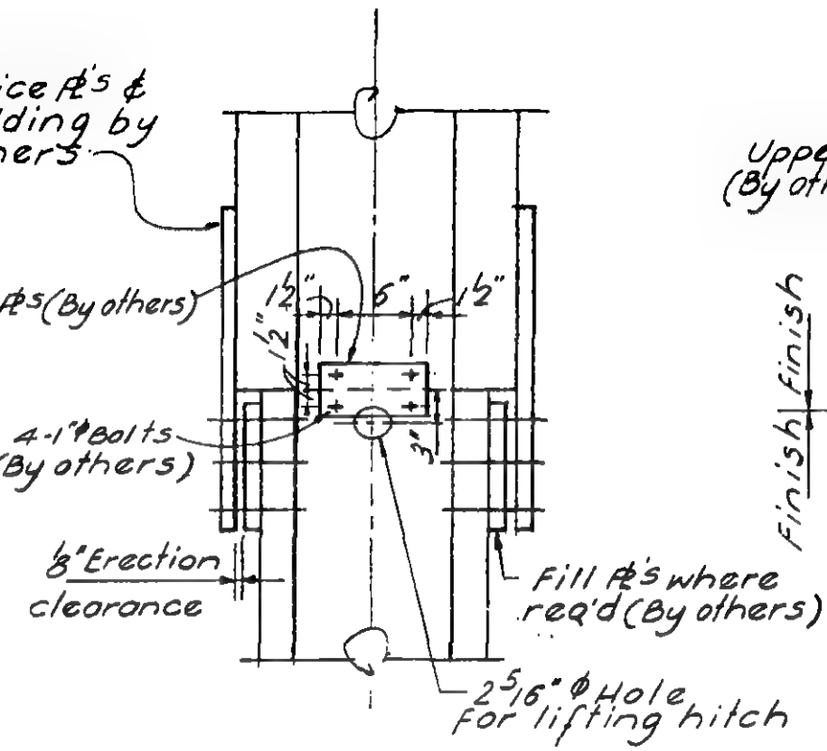

SECTION A-A

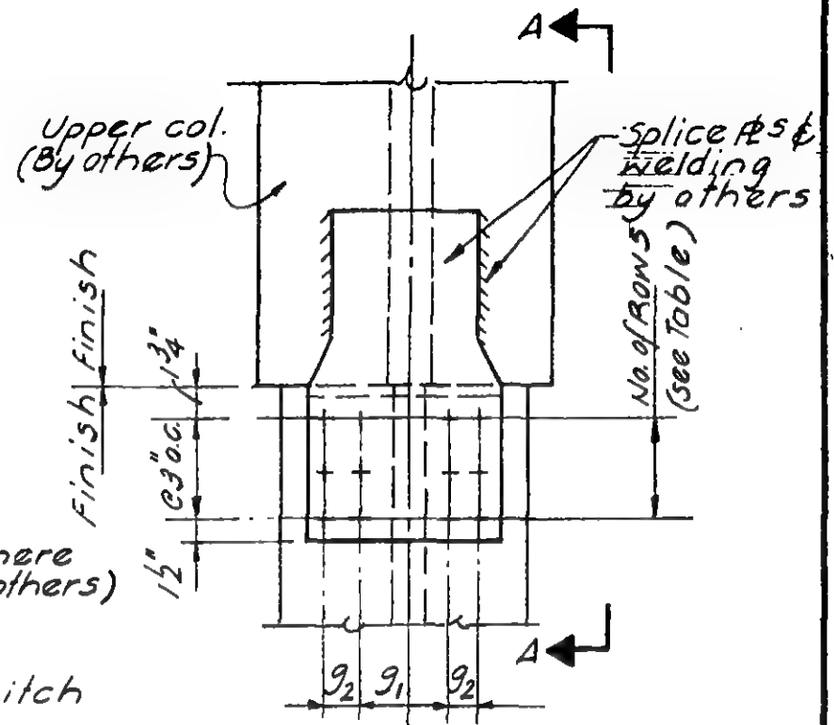

TYPE B

LOWER COLUMN SIZE	TYPE	NO. & SIZE OF BOLTS	No. OF ROWS	g	g1	g2
14WF 61 THRU 84 INCL.	A	6-¾"ϕ	3	5½"		
" 87 " 136 "	A	10-¾"ϕ	5	5½"		
" 142 " 193 "	A	10-¾"ϕ	5	11½"		
" 202 " 264 "	A	10-⅞"ϕ	5	11½"		
" 287 " 342 "	A	12-⅞"ϕ	6	11½"		
" 370 " 426 "	A	16-⅞"ϕ	8	11½"		
" 455 & 500	B	16-1"ϕ	4		5½"	3"
" 550 & 605	B	18-1"ϕ	5		5½"	3"

Notes:
1. All bolts shown not in this contract.

LICENSED PROFESSIONAL ENGINEER
LESLIE E. ROBERTSON
No. 34360
UNIVERSITY OF THE STATE OF NEW YORK

10-31-68
DRAWN
S.C.
REVIEWED
E.L.

10-JK2-17

SKILLING - HELLE - CHRISTIANSEN - ROBERTSON Structural & Civil Engineers

PROJECT THE WORLD TRADE CENTER | TITLE TYP. DET. OF TEMP. COL. CAP FOR CONST. CRANE SUP'T. | DATE 10-20-67

REVISIONS
11-8-67
1-5-68
3-13-68
6-11-68
6-28-68
7-19-68
10-15-68

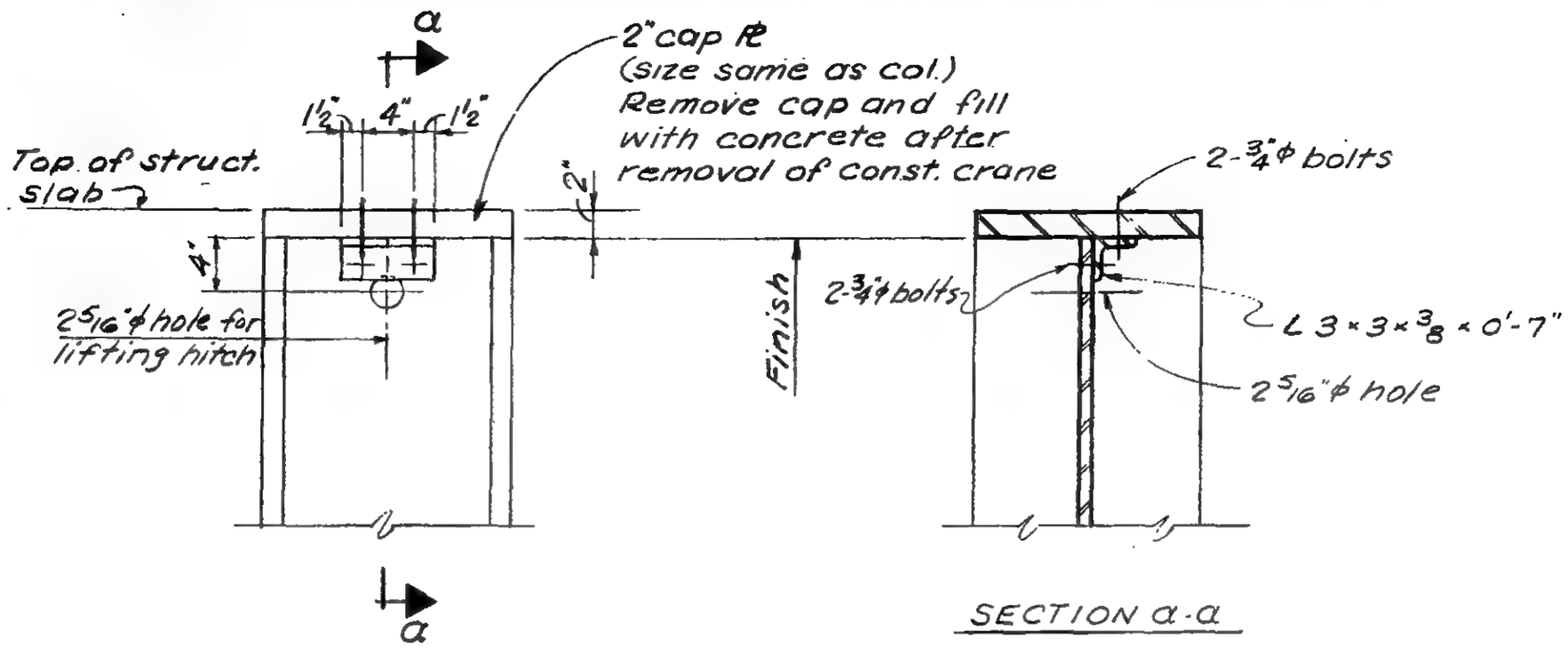

SECTION a-a

COLUMN No.	TOP ELEVATION OF CAP ℄
J13-1	EL. 308'-10"
J14-5	308'-6½"
J15-4	308'-6½"
J17-4	308'-2"
J19-4	308'-2"
J21-3	308'-0"
J23-3	307'-10"
J25-3	307'-0"
K27-2	305'-9"
K29-1	305'-6"
K29-2	306'-3"
K29-3	308'-0"
K31-1	305'-6"
K31-2	306'-0"

COLUMN No.	TOP ELEVATION OF CAP ℄
K-31-11	El. 309'-9"
J11-9	El. 310'-0"

LICENSED PROFESSIONAL ENGINEER LESLIE E. ROBERTSON No. 34360 UNIVERSITY OF THE STATE OF NEW YORK

10-JK2-30

SKILLING - HELLE - CHRISTIANSEN - ROBERTSON Structural & Civil Engineers

PROJECT THE WORLD TRADE CENTER | TITLE TYP. DET. OF COLUMN SITTING ON TOP OF GIRDER | DATE 10-20-67

REVISIONS

11-8-67

1-5-68

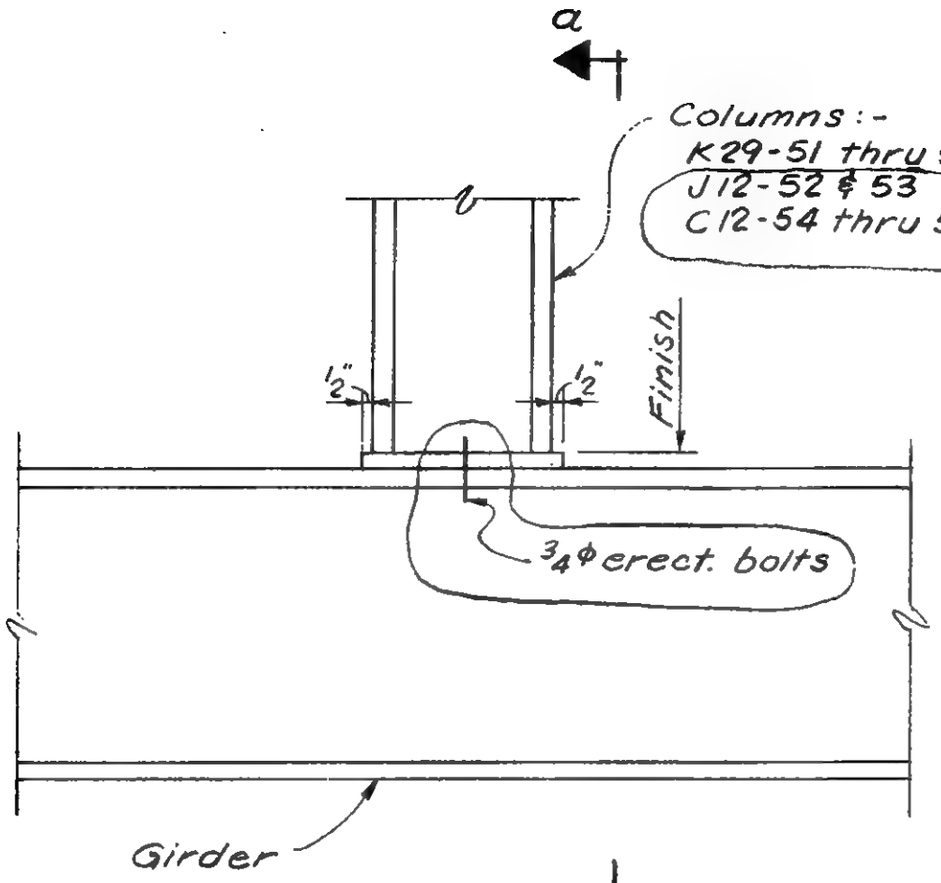

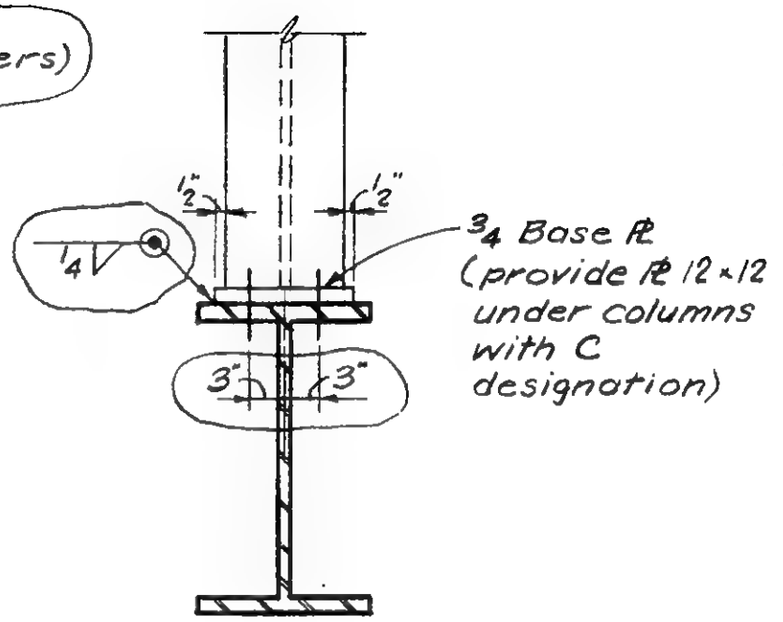

SECTION a-a

NOTE:
Connection between Pl. & column similar to Splice Detail 104 (shop weld may be used)

LICENSED PROFESSIONAL ENGINEER
LESLIE E. ROBERTSON
No. 34360
UNIVERSITY OF THE STATE OF NEW YORK

10-JK2-31

SKILLING, HELLE, CHRISTIANSEN, ROBERTSON — Structural & Civil Engineers

PROJECT THE WORLD TRADE CENTER | TITLE DETAIL OF COLUMN SITTING ON TOP OF GIRDER | DATE 11-5-68

REVISIONS

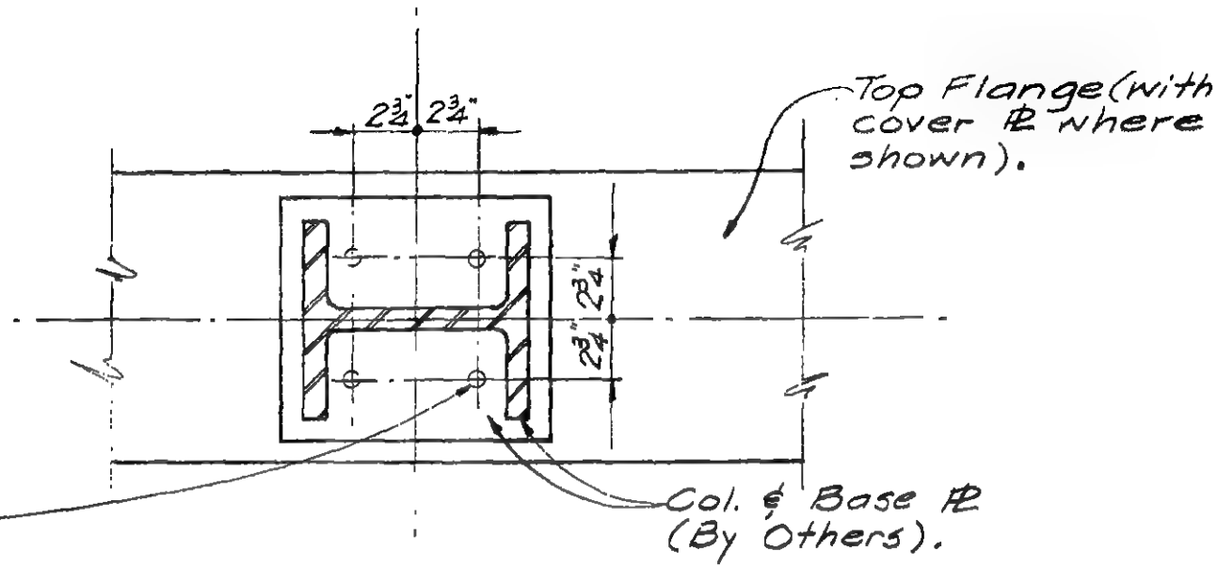

LICENSED PROFESSIONAL ENGINEER
LESLIE E. ROBERTSON
No. 34360
UNIVERSITY OF THE STATE OF NEW YORK

DESIGNED

DRAWN

REVIEWED

10-JK2-31A

SKILLING, HELLE, CHRISTIANSEN, ROBERTSON — Structural & Civil Engineers

PROJECT: THE WORLD TRADE CENTER | TITLE: DETAIL OF COLUMN SITTING ON TOP OF GIRDER | DATE: 2-4-69

REVISIONS

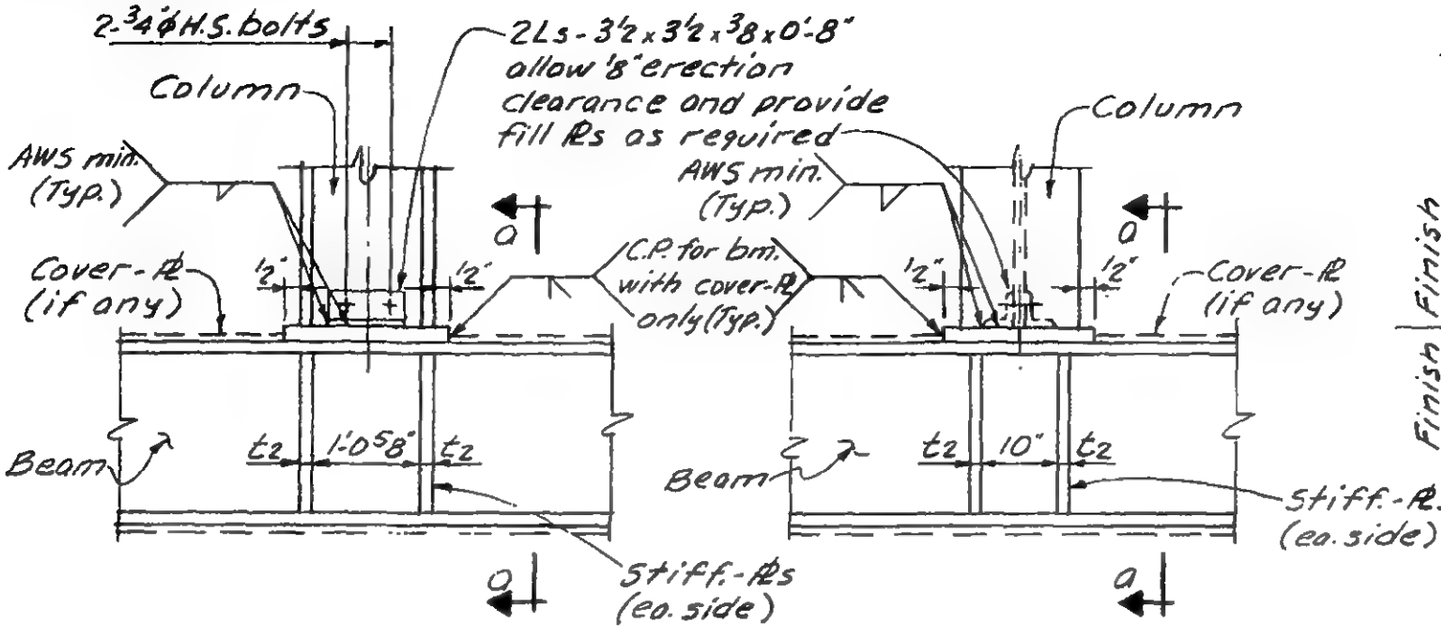

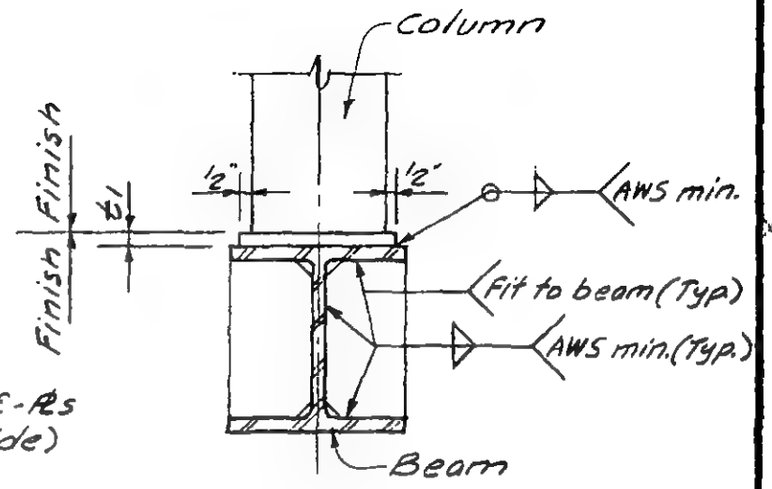

Notes:
1. All bolts to be A-325 friction type.
2. All welds to be E70xx.

DETAIL NO.	TYPE	BEARING Pl		STIFF. Pls		DETAIL NO.	TYPE	BEARING Pl		STIFF. Pls	
		t_1	Fy	t_2	Fy			t_1	Fy	t_2	Fy
1	I	1"	36	¾"	42						

LICENSED PROFESSIONAL ENGINEER — LESLIE E. ROBERTSON — No. 34360 — UNIVERSITY OF THE STATE OF NEW YORK

DESIGNED

DRAWN A.L.F.

REVIEWED E.L.

10-JK2-31B

SKILLING - HELLE - CHRISTIANSEN - ROBERTSON Structural & Civil Engineers

PROJECT THE WORLD TRADE CENTER | TITLE DET. OF COLUMN CAP OVER COL. K31-4, K35-3, K35-52A & K37-3 | DATE 11-24-67

REVISIONS
11-5-68
4-4-69

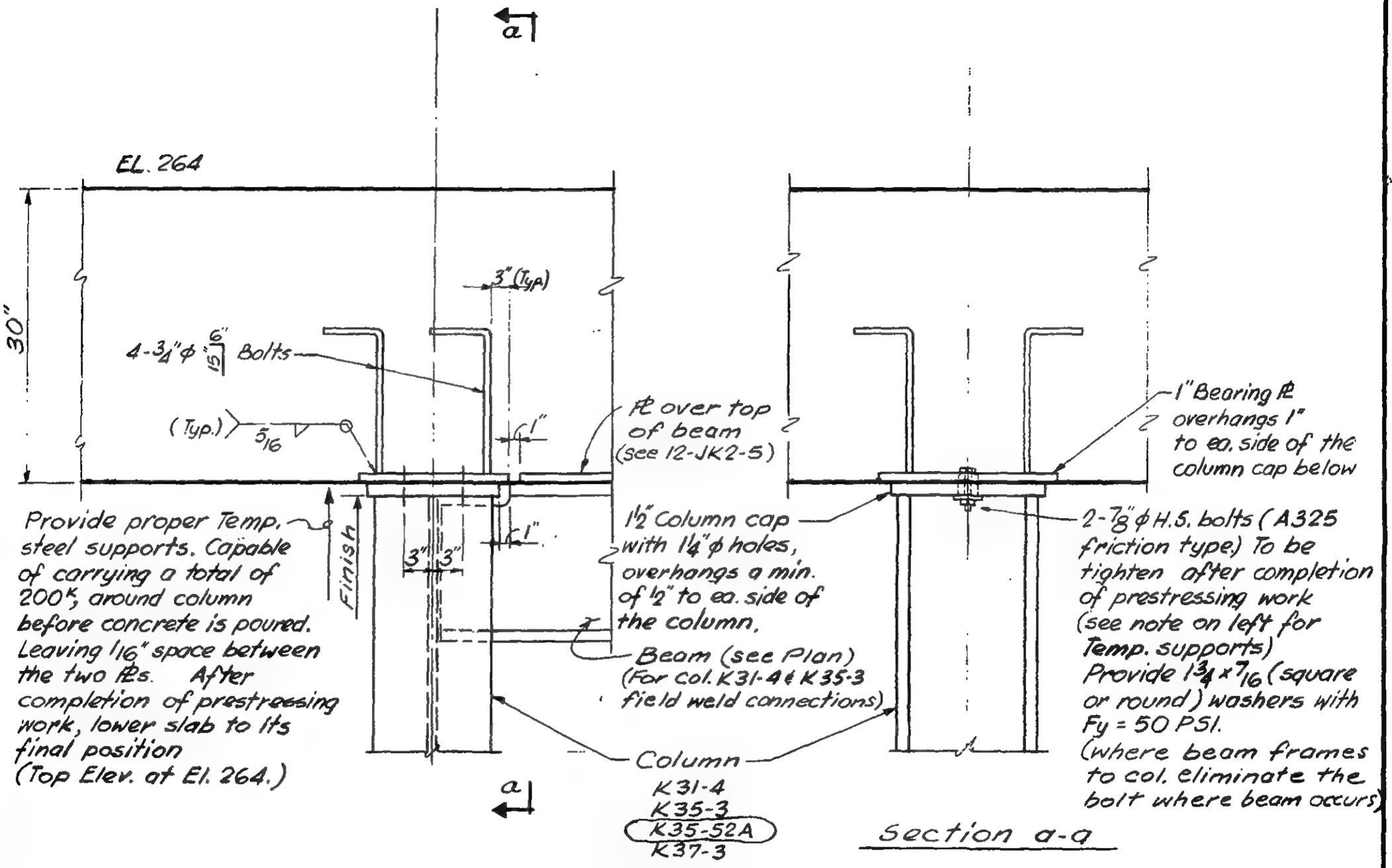

Section a-a

LICENSED PROFESSIONAL ENGINEER LESLIE E. ROBERTSON No. 34360 UNIVERSITY OF THE STATE OF NEW YORK

DRAWN S.C.
REVISED E.L.

10-JK2-32

SKILLING - HELLE - CHRISTIANSEN - ROBERTSON Structural & Civil Engineers

PROJECT THE WORLD TRADE CENTER | TITLE HANGER DETAIL | DATE 1-5-68

REVISIONS

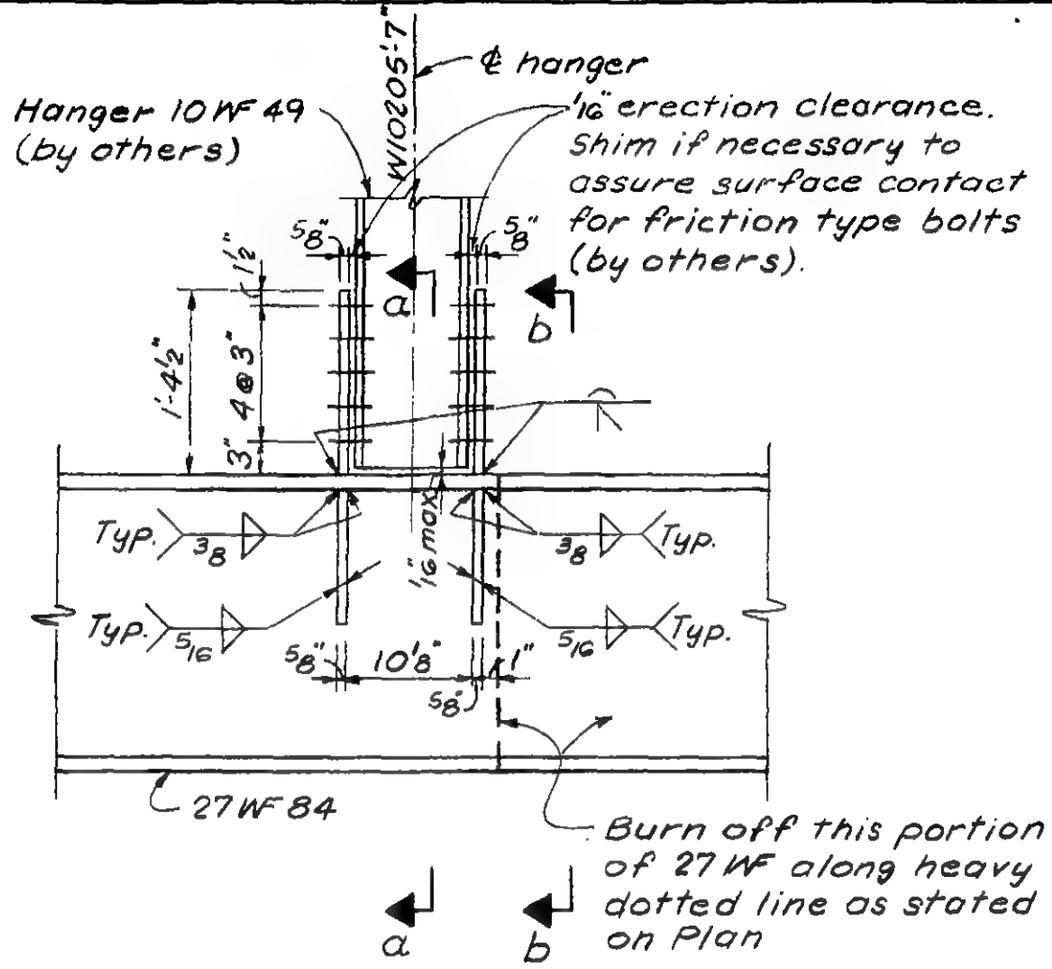

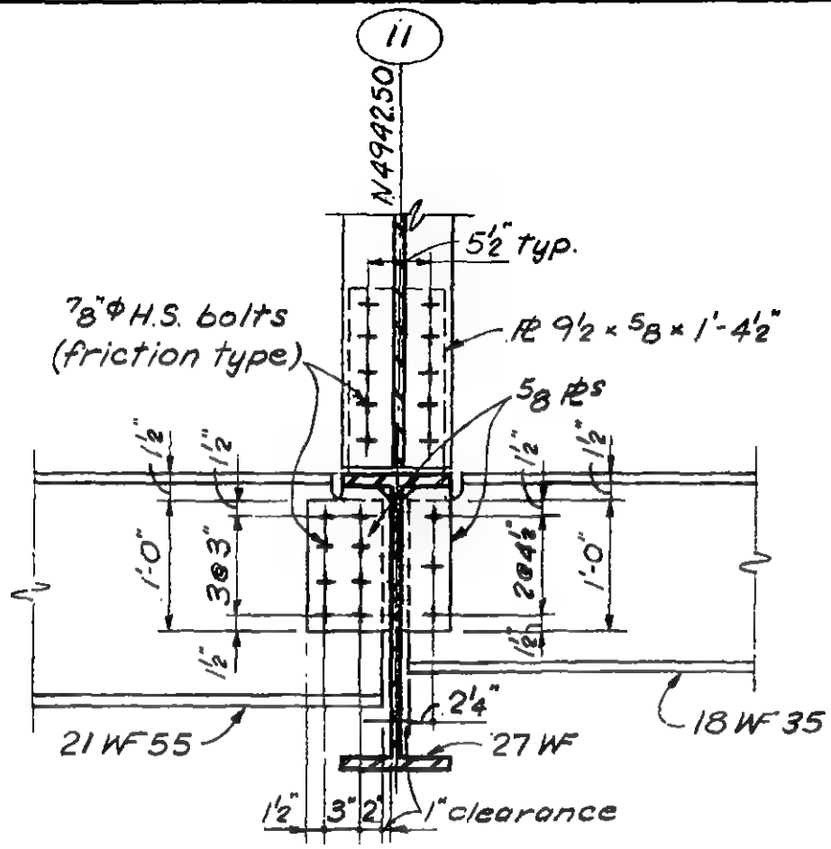

Section a-a

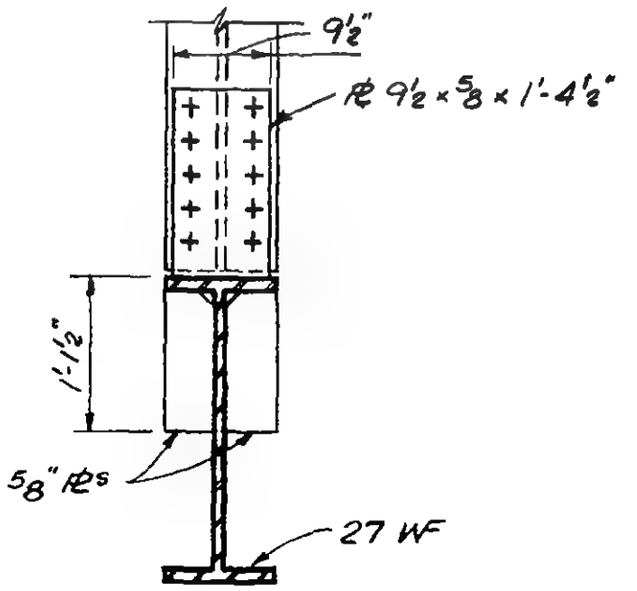

Section b-b

LICENSED PROFESSIONAL ENGINEER
LESLIE E. ROBERTSON
No. 34360
STATE OF NEW YORK

10-JK2-33

SKILLING - HELLE - CHRISTIANSEN - ROBERTSON Structural & Civil Engineers

PROJECT THE WORLD TRADE CENTER | TITLE DETAIL OF COLUMN J8-6 | DATE 4-5-68

REVISIONS
7-19-68
9-4-68
11-5-68

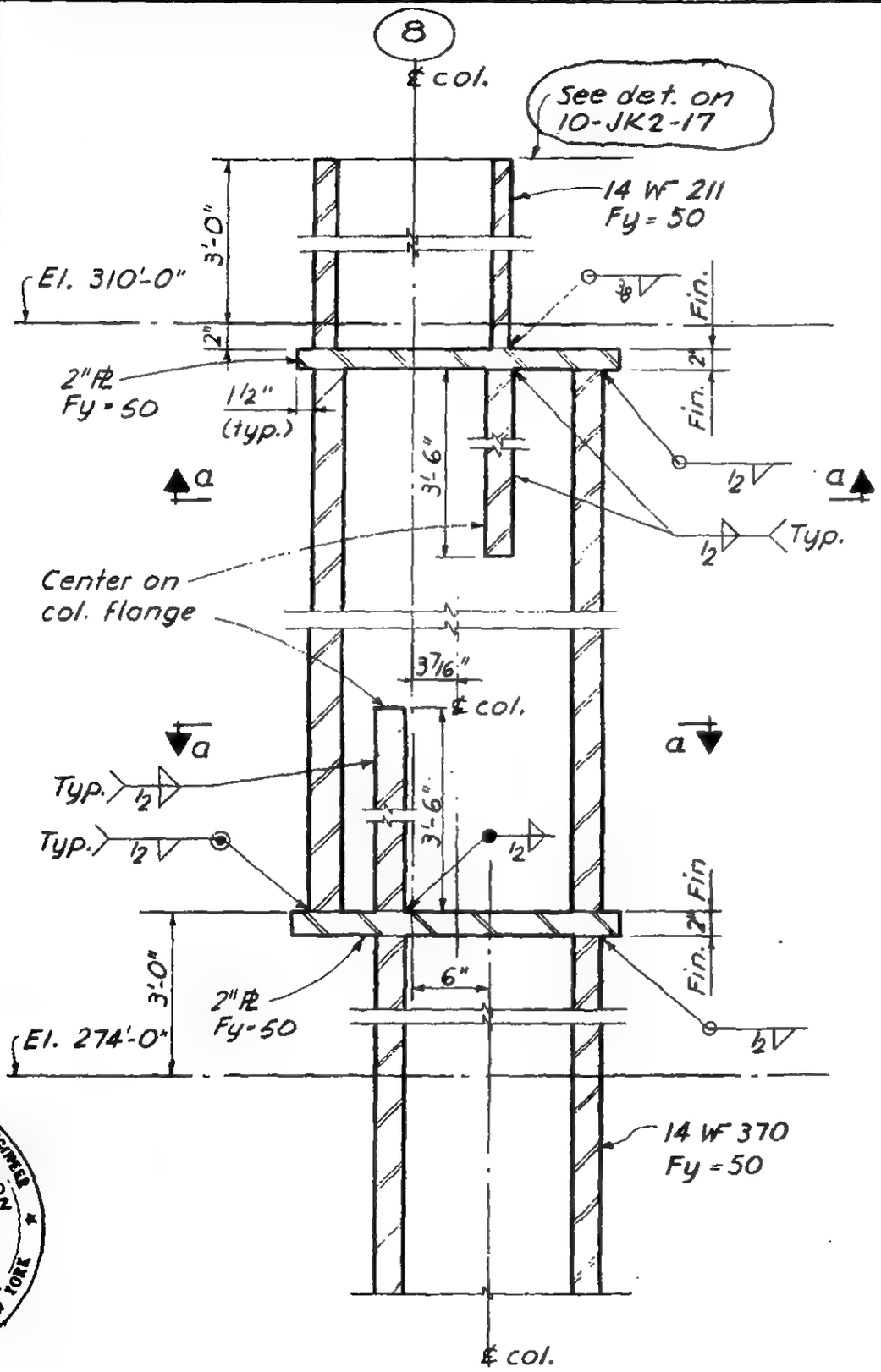

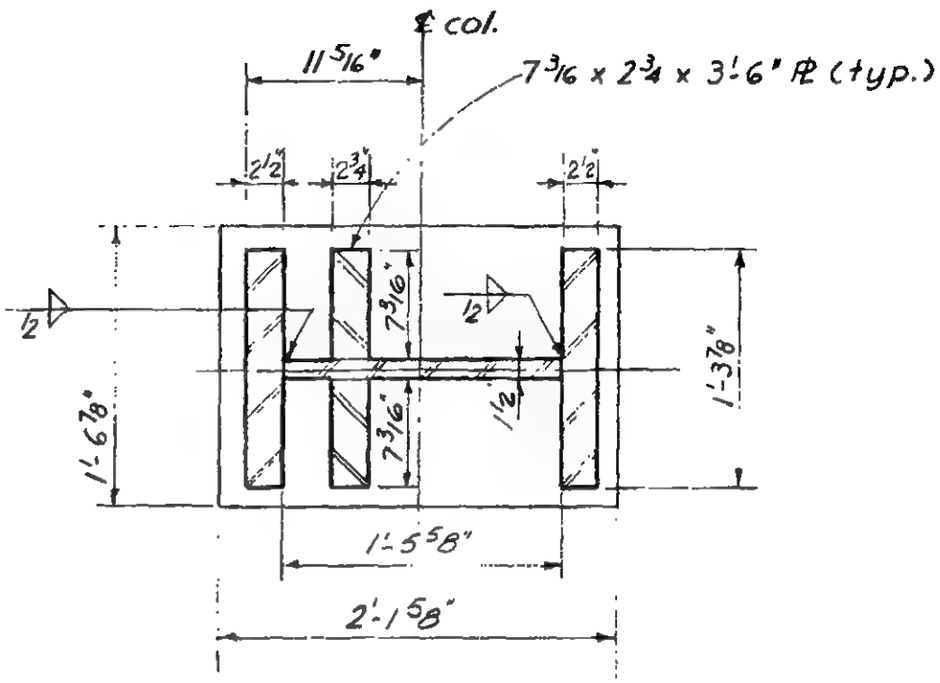

All col. material Fy = 50

Section a-a

LICENSED PROFESSIONAL ENGINEER LESLIE E. ROBERTSON No. 34360 UNIVERSITY OF THE STATE OF NEW YORK

10-31-68

10-JK2-34

SKILLING - HELLE - CHRISTIANSEN - ROBERTSON Structural & Civil Engineers

PROJECT THE WORLD TRADE CENTER | TITLE COLUMN DETAILS | DATE 4-5-68

REVISIONS

5-1-68

6-7-68

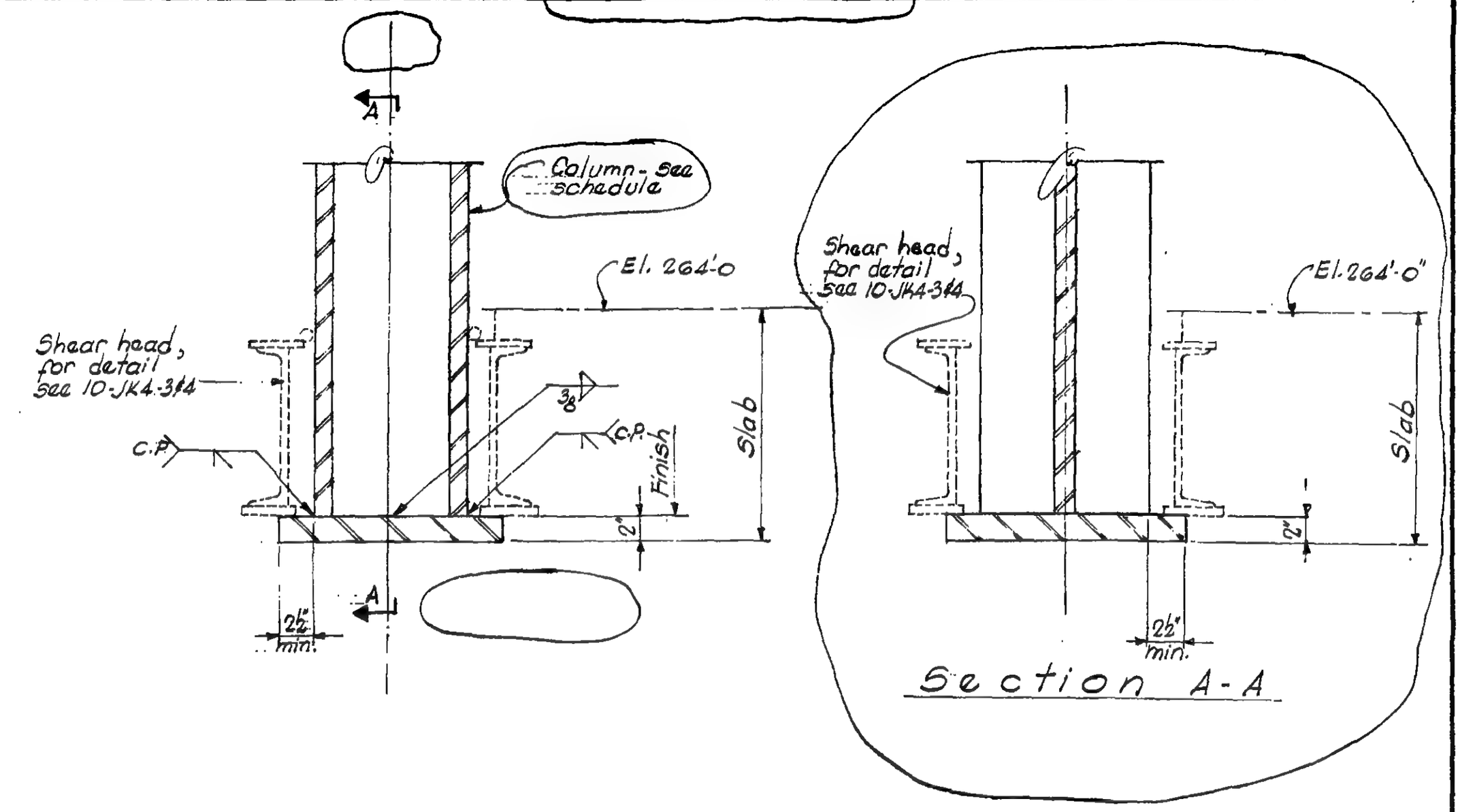

Section A-A

10-JK2-35

SKILLING - HELLE - CHRISTIANSEN - ROBERTSON Structural & Civil Engineers

PROJECT ~~THE WORLD TRADE CENTER~~ | TITLE COLUMN SPLICE DETAIL | DATE 6-7-68

REVISIONS

11-5-68

12-3-68

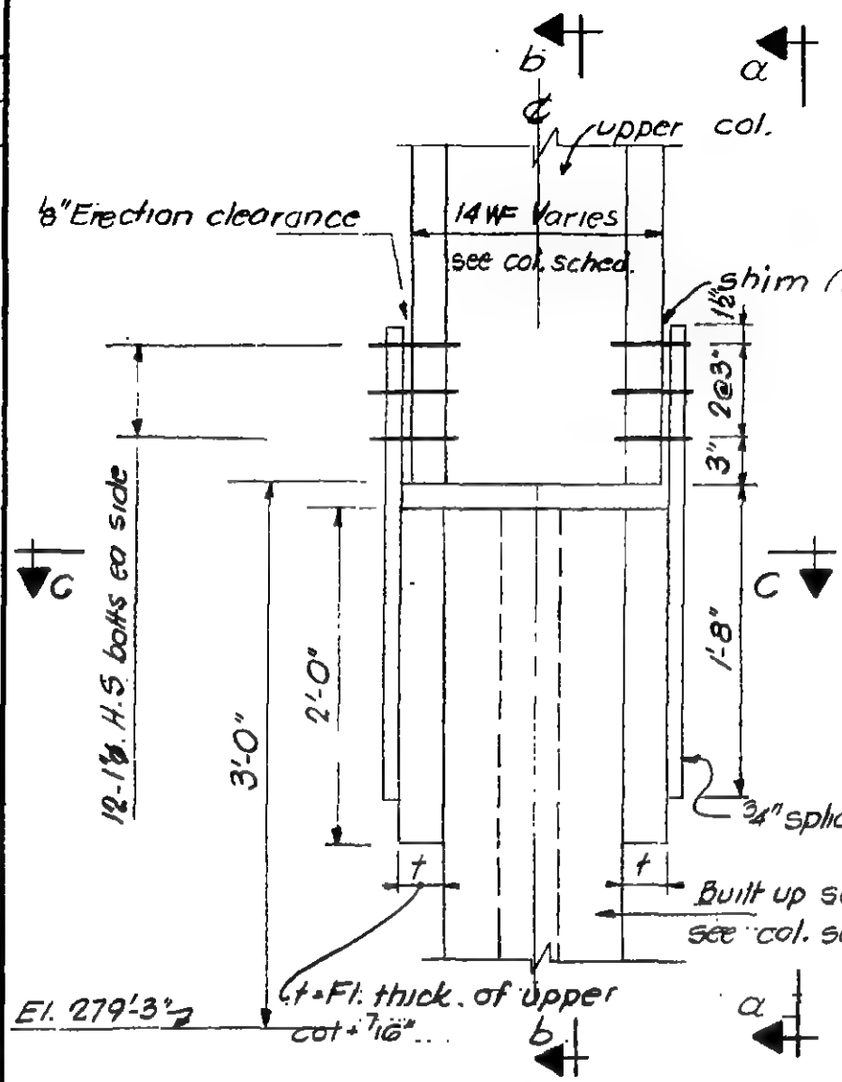

Elevation

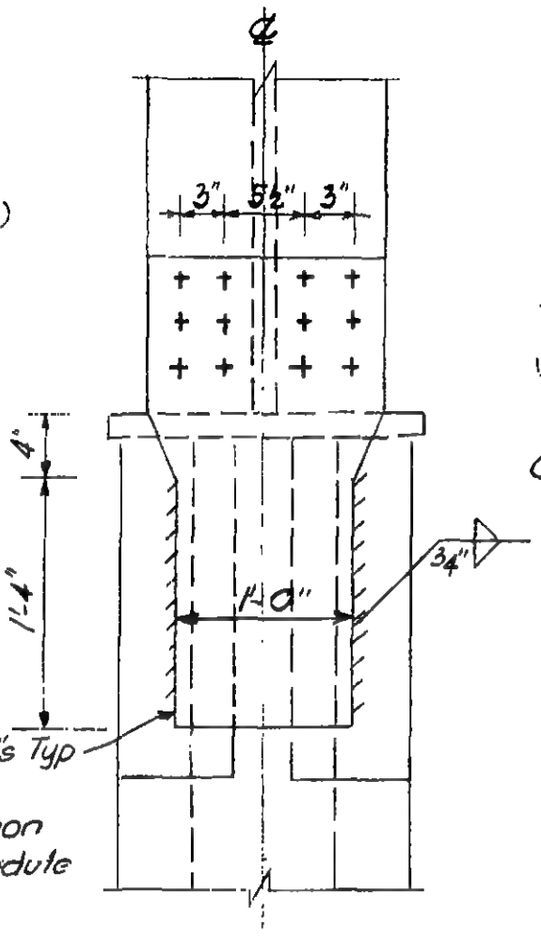

Section a-a

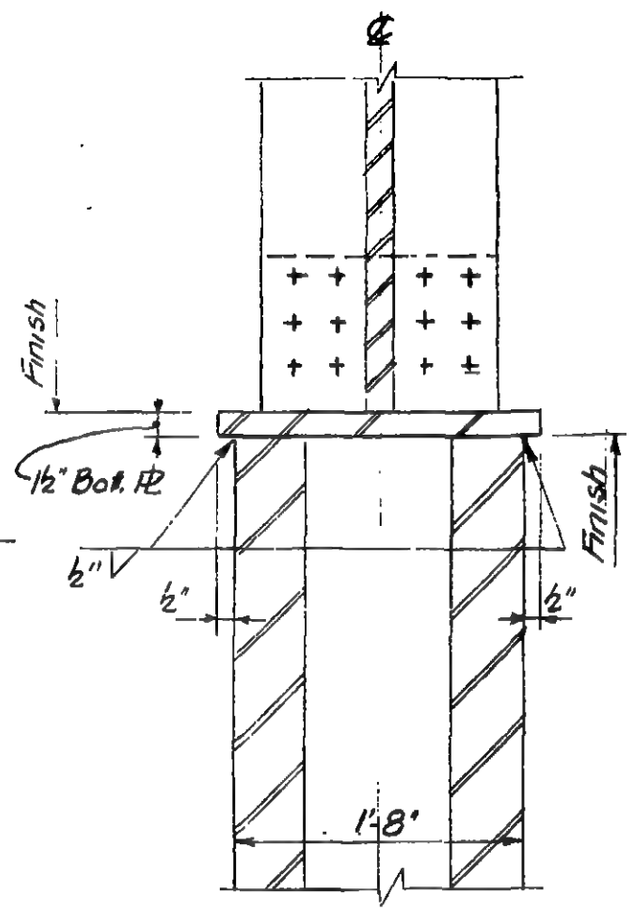

Section b-b

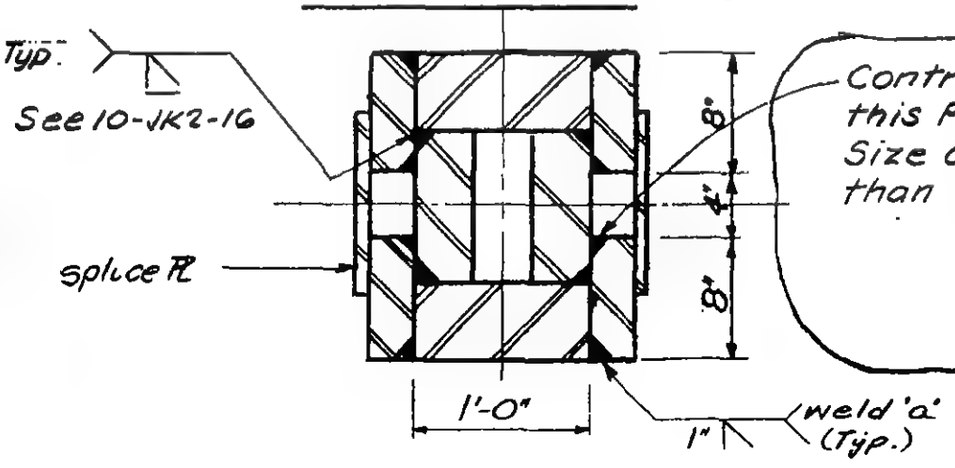

Section c-c

Contractor's option to replace this P.P. weld with fillet weld. Size of fillet weld to be not less than $\frac{D-0.25}{0.707}$ (in.)

Note:

1. See notes on 10-JK2-36
2. Weld 'a' shall not be less than $D = \sqrt{\frac{T}{6}} + \frac{1}{4}$ Where T = Thickness of thinner Pl at the joint.

LICENSED PROFESSIONAL ENGINEER LESLIE E. ROBERTSON No. 34880 STATE OF NEW YORK

10-JK2-35A

SKILLING - HELLE - CHRISTIANSEN - ROBERTSON Structural & Civil Engineers

PROJECT THE WORLD TRADE CENTER | TITLE COLUMN SPLICE DETAIL | DATE 6-7-68

REVISIONS
11-5-68
5-29-69

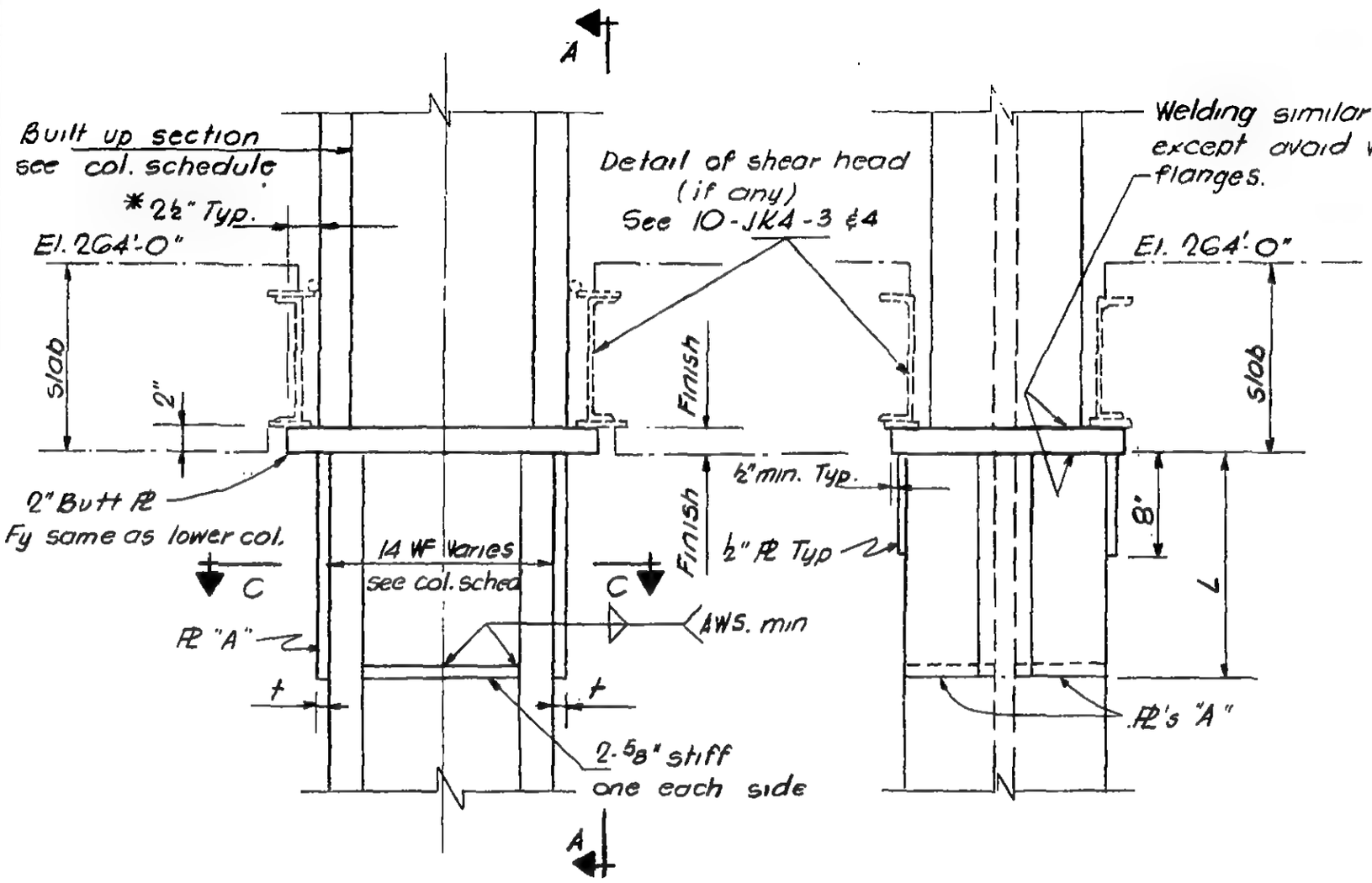

Elevation

Section A-A

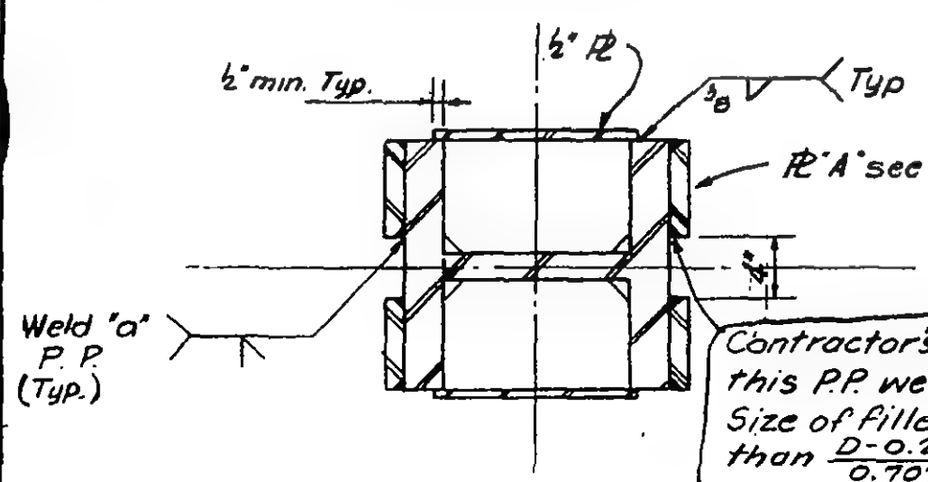

Section C-C

Notes:

1. For col. No. & detail of Pl "A" see schedule on 10-JK2.35C
2. All welds to be E70xx
3. See Notes on 10-JK4-3- for temp. steel support under slab.
4. * If no shear-head occurs, But-Pl to project only ½" from face of either upper or lower column.

Contractor's option to replace this P.P. weld with fillet weld. Size of fillet weld to be not less than $\frac{D-0.25}{0.707}$ (in.)
Weld "a" shall not be less than $D=\sqrt{\frac{T}{2}+\frac{1}{4}}$
Where T = thickness of thinner Pl at the joint.

LICENSED PROFESSIONAL ENGINEER — LESLIE E. ROBERTSON — No. 34360 — UNIVERSITY OF THE STATE OF NEW YORK

DRAWN S.C.
REVIEWED E.L.

10-JK2.35B

SKILLING - HELLE - CHRISTIANSEN - ROBERTSON Structural & Civil Engineers

PROJECT THE WORLD TRADE CENTER | TITLE COLUMN - SPLICE - DETAIL | DATE 6-7-68

REVISIONS
9-4-68

COLUMN NO.	PL "A" t	PL "A" L	PL "A" Weld "a" (P.P.)
J72 - 7	1¼"	1'-8"	¾"
J72 - 8	1¼"	1'-8"	¾"
J72 - 9	1"	2'-0"	¾"
J72 - 10	1⅝"	1'-8"	¾"
J72 - 11	1"	2'-0"	¾"
J72 - 12	1¾"	1'-10"	⅞"
J73 - 7	2⅜"	1'-10"	⅞"
J73 - 8	2⅜"	1'-10"	⅞"
J73 - 9	2¼"	1'-10"	⅞"
J73 - 11	2¼"	1'-10"	⅞"
J73 - 12	2⅜"	1'-10"	⅞"
J74 - 6	NOT	REQ'D	

COLUMN NO.	PL "A" t	PL "A" L	PL "A" Weld "a" (P.P.)
J74 - 7	NOT	REQ'D	
J74 - 8	1¼"	1'-8"	¾"
J74 - 9	1⅝"	1'-8"	¾"
J74 - 10	1⅜"	1'-8"	¾"
J74 - 11	1¼"	1'-8"	¾"
J75 - 6	1⅝"	1'-8"	¾"
J75 - 7	1¾"	1'-10"	⅞"
J75 - 8	NOT	REQ'D	
J75 - 14	NOT	REQ'D	
J75 - 15	1⅝"	1'-8"	¾"

LICENSED PROFESSIONAL ENGINEER
LESLIE E. ROBERTSON
No. 34960
UNIVERSITY OF THE STATE OF NEW YORK

Notes:

1. See detail on 10-JK2-35B
2. PL "A" to have Fy = 42 KSI

10-JK2-35C

SKILLING - HELLE - CHRISTIANSEN - ROBERTSON Structural & Civil Engineers

PROJECT THE WORLD TRADE CENTER | TITLE SCHEDULE OF COLUMN SPLICES | DATE 4-26-68

REVISIONS
- 9-4-68
- 4-4-69

Det. No.	Type	Column sizes Upper	Column sizes Lower	Elev. of splice	H	R-M	Splice PL W_T	Splice PL W_B	Splice PL A	Splice PL Thick	No. & size of bolts	No. of rows	g	Welds #1	Welds #2	Welds #3
1		See Detail on 10-JK2-38														
2	I	14WF370	14WF370	277'-0"	1'-9"	1 5/8"	15"	10"	15"	3/4"	10-7/8φ	5	11 1/2"	9/16"	1/2"	
3	I	14WF264	14WF264	277'-0"	1'-6"	1'8"	15"	10"	15"	5/8"	6-7/8φ	3	11 1/2"	7/16"	3/8"	
4	I	14WF370	14WF370	270'-11 1/2"	1'-7"		15"	10"	15"	3/4"	10-7/8φ	5	11 1/2"	9/16"		
5	I	14WF287	14WF287	267'-0"	1'-9"		15"	10"	15"	3/4"	8-7/8φ	4	11 1/2"	1/2"		
6	I	14WF342	14WF342	277'-0"	1'-10"		15"	10"	15"	3/4"	8-7/8φ	4	11 1/2"	1/2"		
7	I	14WF550	14WF605 + PLS 14-3	277'-0"	2'-0"		17"	10"	15"	7/8"	12-1"φ	6	11 1/2"	5/8"		

Notes:
1. See Dwg. 10-JK2-37 for Type I column splice detail.
2. Material:
   a. Splice PLs — A-36
   b. Other PLs — To have Fy same as lower column.
3. All welds to be E70xx.
4. All bolts to be A-325 H.S. Friction Type.

LICENSED PROFESSIONAL ENGINEER LESLIE E. ROBERTSON No. 34360 UNIVERSITY OF THE STATE OF NEW YORK

DRAWN S.C.

REVIEWED E.L.

10-JK2-36

SKILLING - HELLE - CHRISTIANSEN - ROBERTSON Structural & Civil Engineers

PROJECT THE WORLD TRADE CENTER | TITLE COLUMN SPLICE DETAILS | DATE 4-26-68

REVISIONS

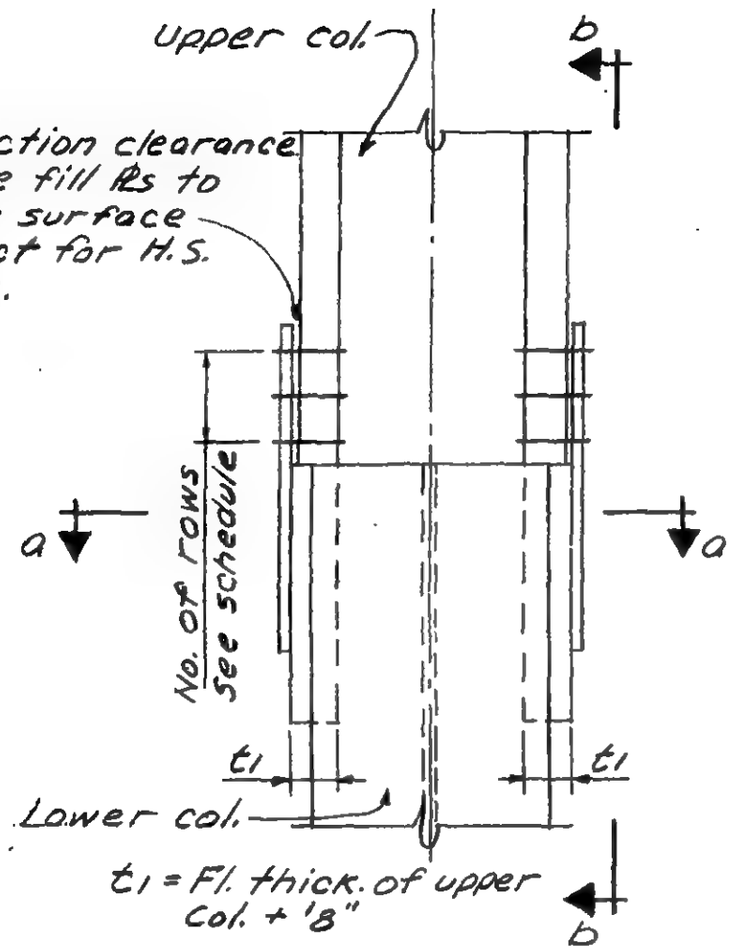

Elevation

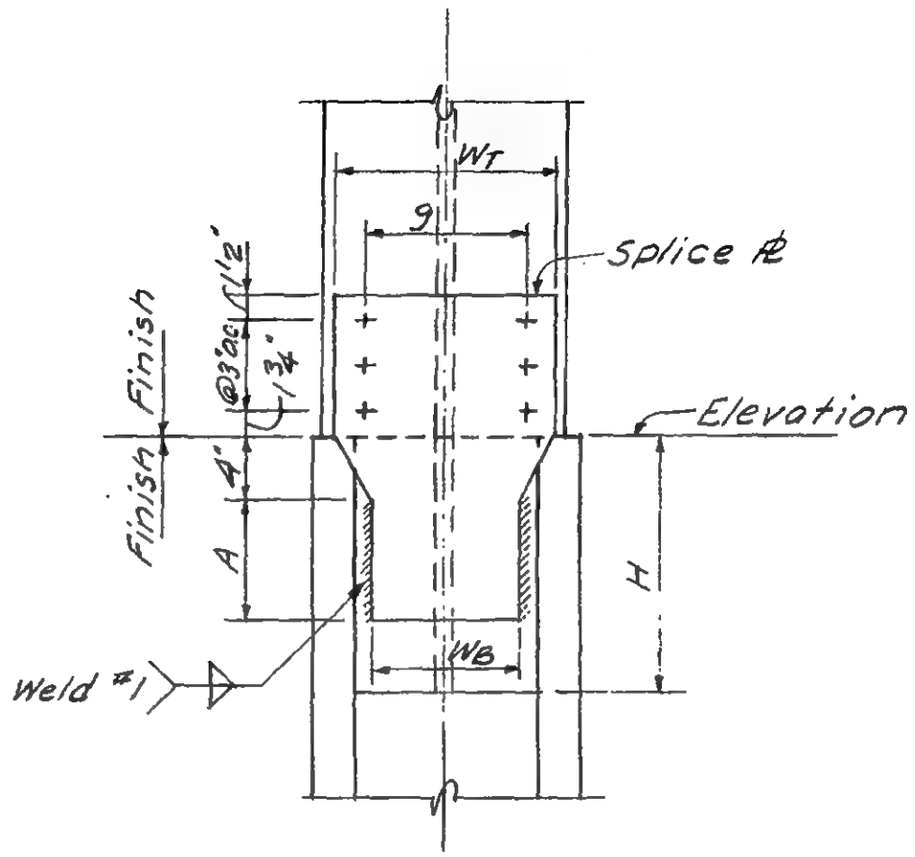

Section b-b

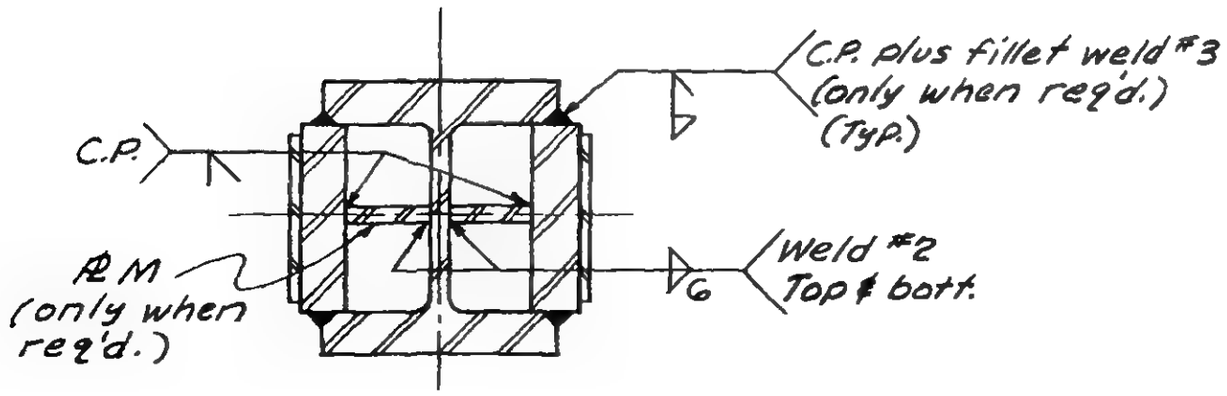

Section a-a

Note:
1. See schedule on 10-JK2-36.

TYPE I

LICENSED PROFESSIONAL ENGINEER LESLIE E. ROBERTSON No. 84360 UNIVERSITY OF THE STATE OF NEW YORK

10-JK2-37

SKILLING - HELLE - CHRISTIANSEN - ROBERTSON Structural & Civil Engineers

PROJECT THE WORLD TRADE CENTER | TITLE COLUMN SPLICE DETAILS | DATE 4-26-68

REVISIONS

6-17-68
11-5-68
1-8-69

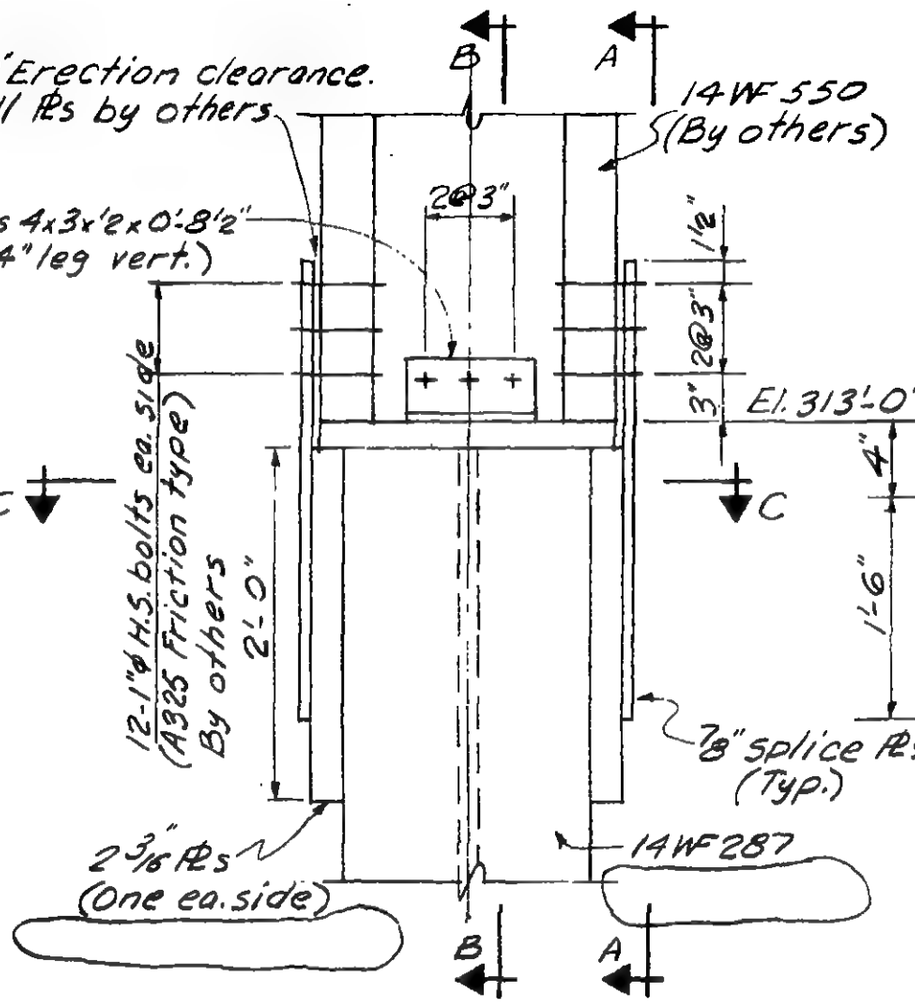

Elevation

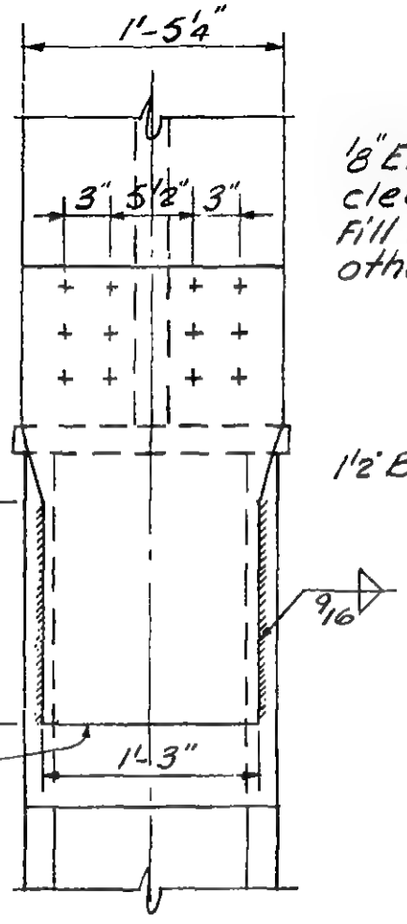

Section A-A

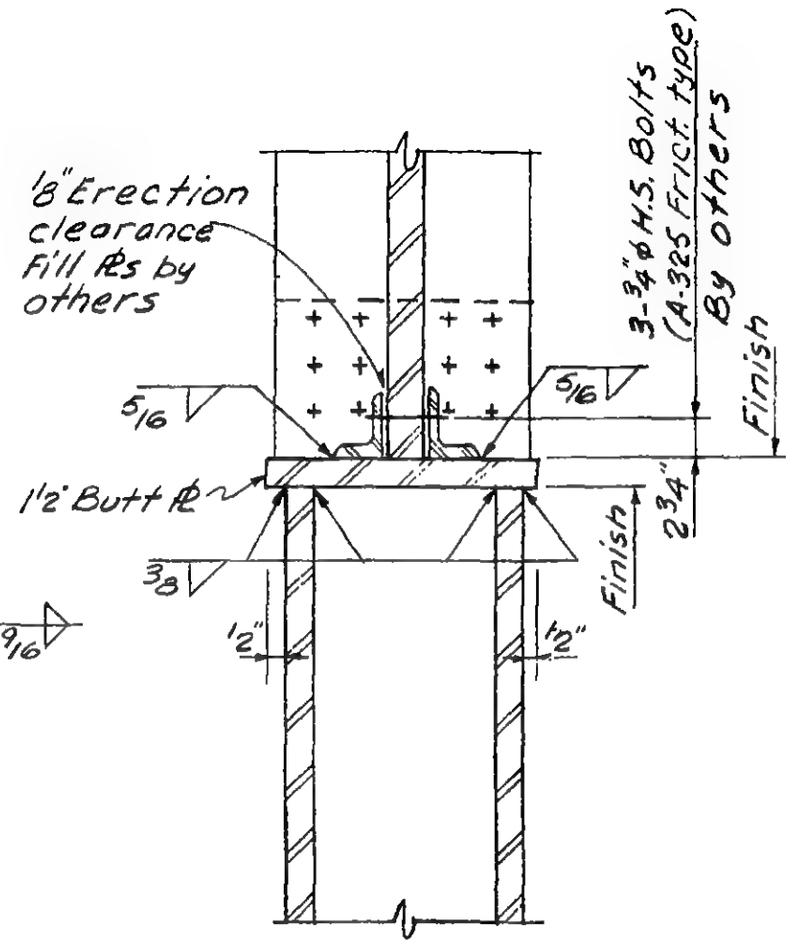

Section B-B

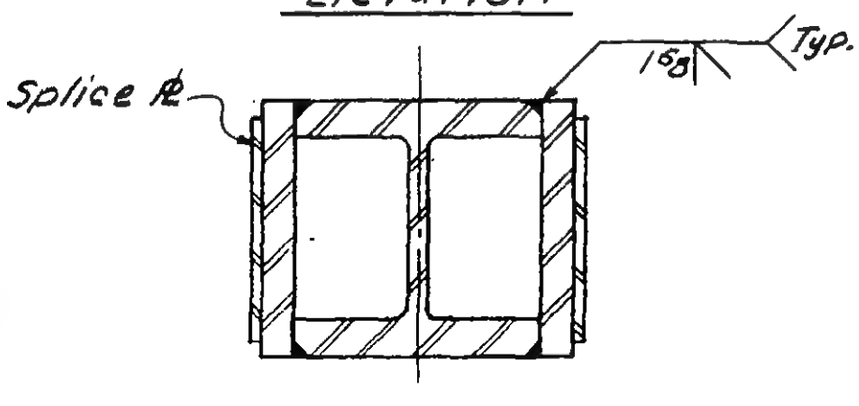

Section C-C

Note:
1. See notes on 10-JK2-36.

LICENSED PROFESSIONAL ENGINEER LESLIE E. ROBERTSON No. 34360 UNIVERSITY OF THE STATE OF NEW YORK

DRAWN S.C.
REVIEWED E.L.

10-JK2-38

SKILLING, HELLE, CHRISTIANSEN, ROBERTSON — Structural & Civil Engineers

PROJECT THE WORLD TRADE CENTER | TITLE COLUMN SPLICE DETAILS (J9-6) | DATE 1-8-69

REVISIONS

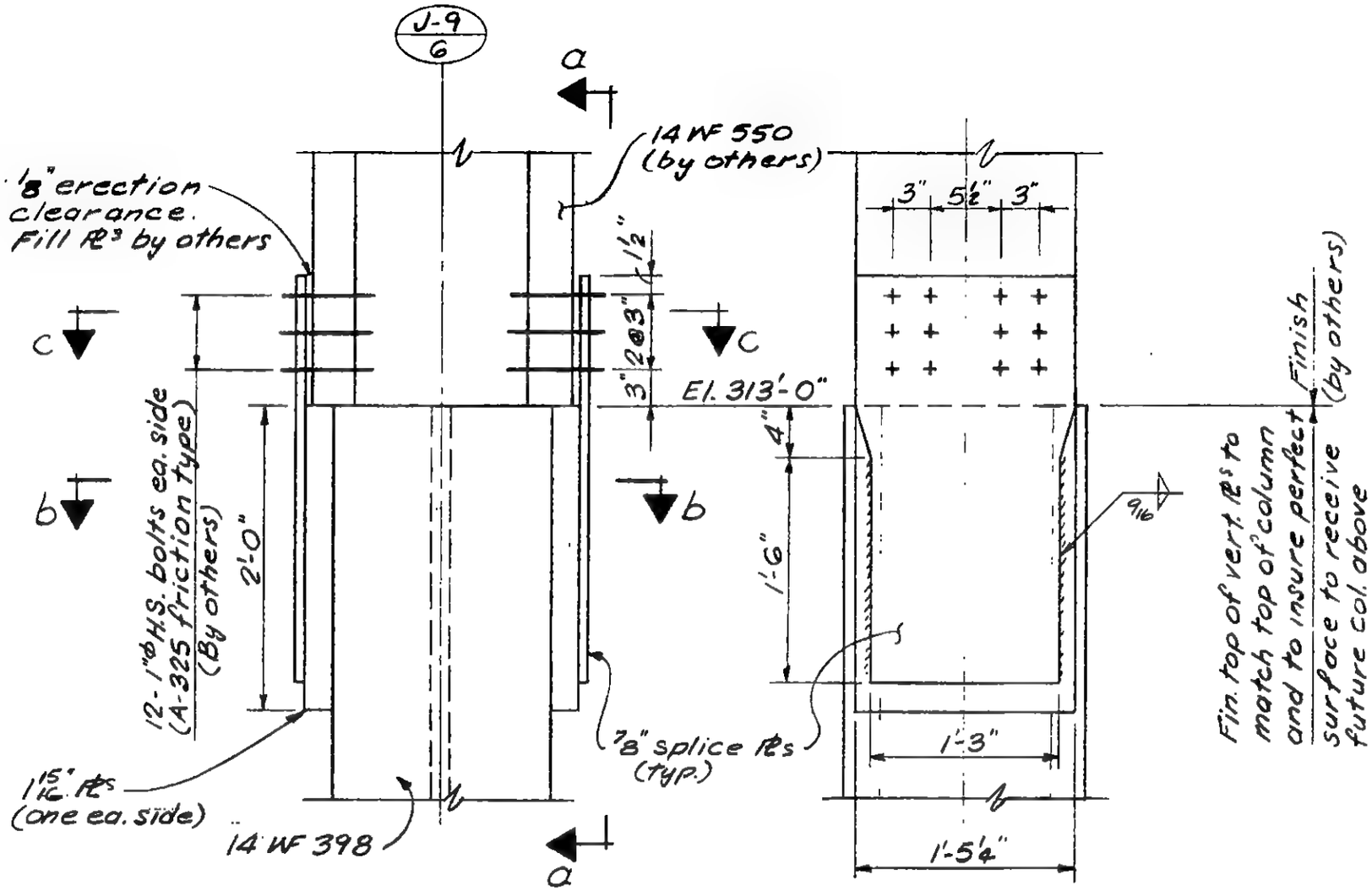

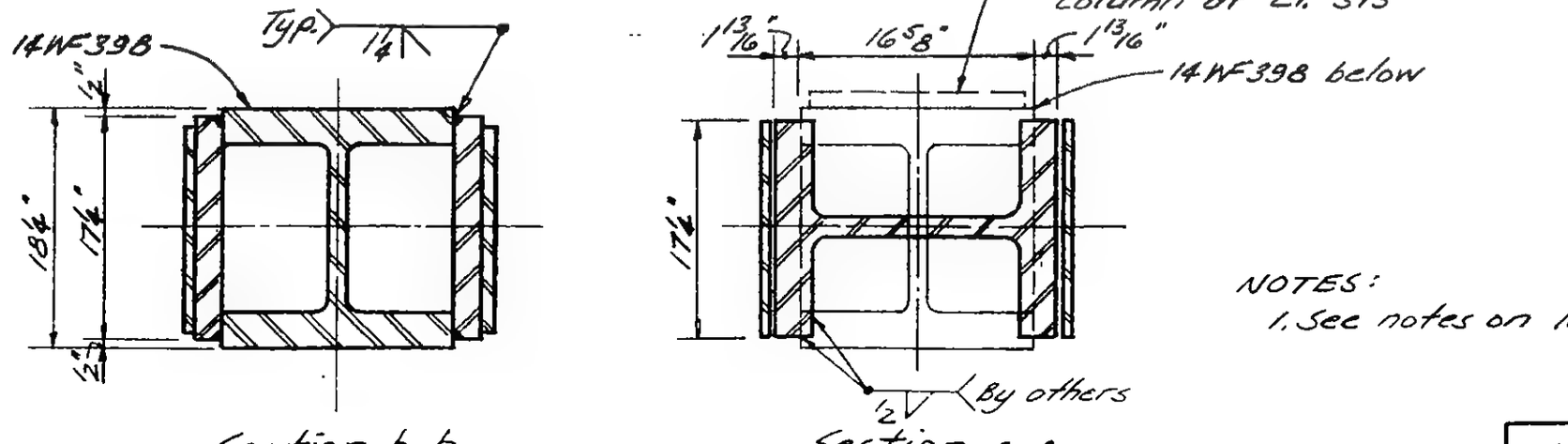

NOTES:
1. See notes on 10-JK2-36

LICENSED PROFESSIONAL ENGINEER
LESLIE E. ROBERTSON

DESIGNED

DRAWN
S.C.

REVIEWED
E.L.

10-JK2-38A

SKILLING - HELLE - CHRISTIANSEN - ROBERTSON Structural & Civil Engineers

PROJECT THE WORLD TRADE CENTER | TITLE COLUMN SPLICE DETAIL | DATE 6-7-68

REVISIONS

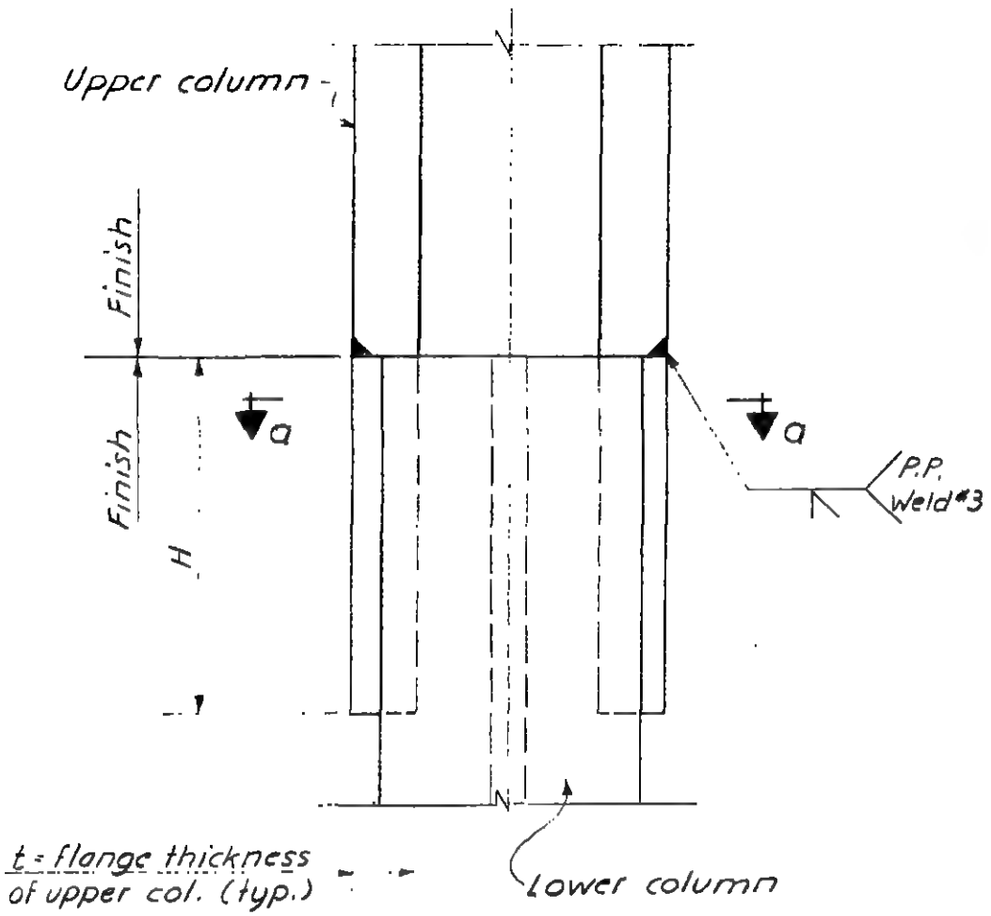

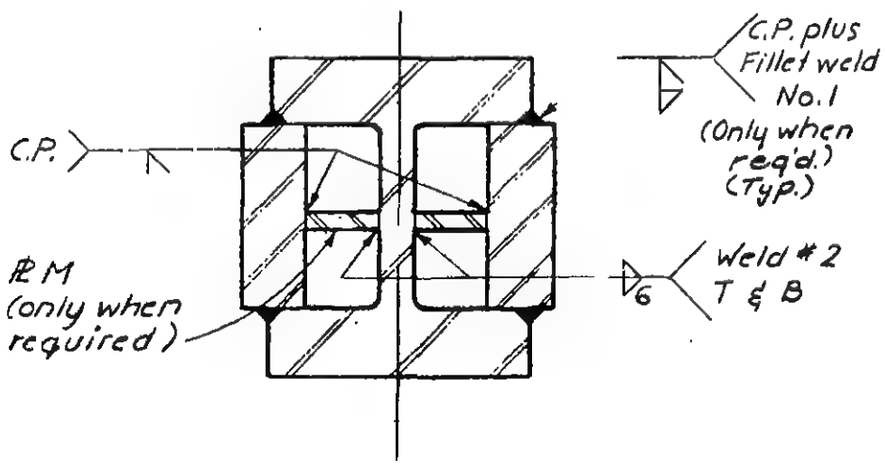

Section a-a

SCHEDULE

DET. NO.	COL. SIZE UPPER	COL. SIZE LOWER	ELEV. OF SPLICE	H	℄ M	WELD #1	WELD #2	WELD #3
1	14 WF665	14 WF665	293'-0"	2'-3"		½"		1⅛"

Notes:
1. All ℄s to have Fy same as lower col.
2. All welds to be E 70 xx.

LICENSED PROFESSIONAL ENGINEER
LESLIE E. ROBERTSON
No. 34360
UNIVERSITY OF THE STATE OF NEW YORK

10-JK2-39

SKILLING - HELLE - CHRISTIANSEN - ROBERTSON Structural & Civil Engineers

PROJECT THE WORLD TRADE CENTER | TITLE COLUMN SPLICE DETAIL | DATE 6-7-68

REVISIONS

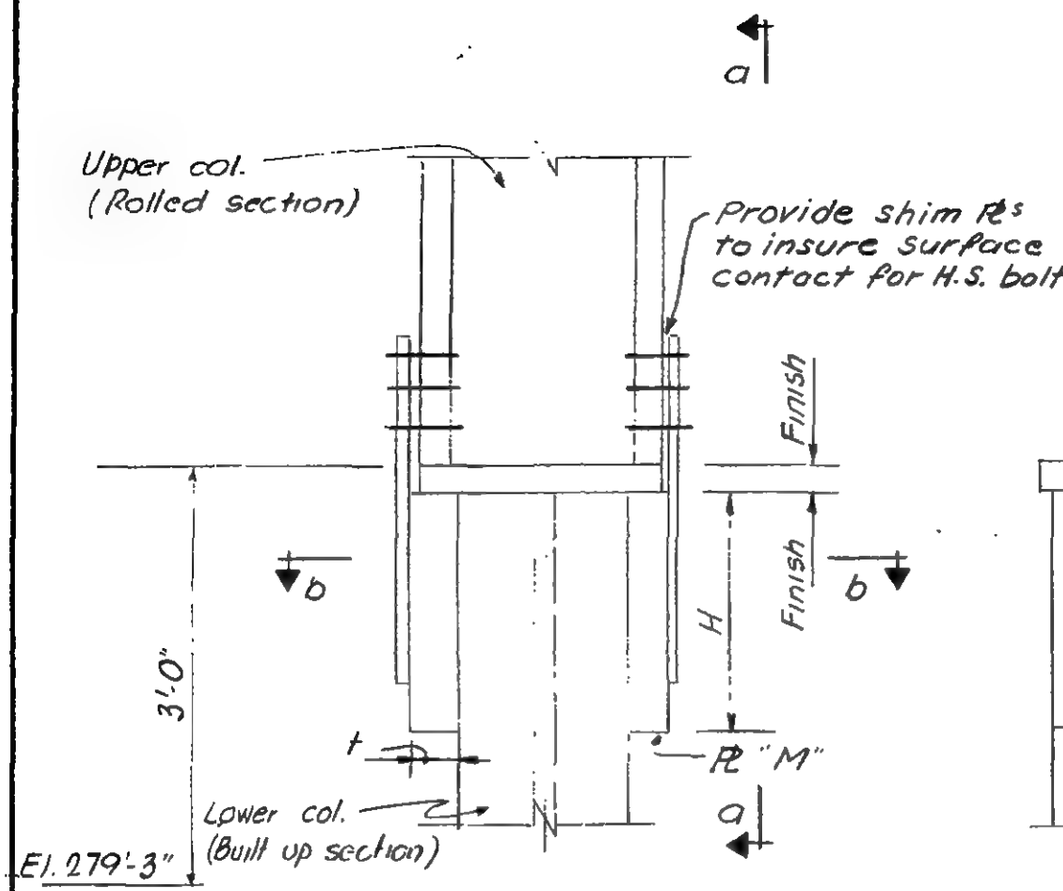

Elevation

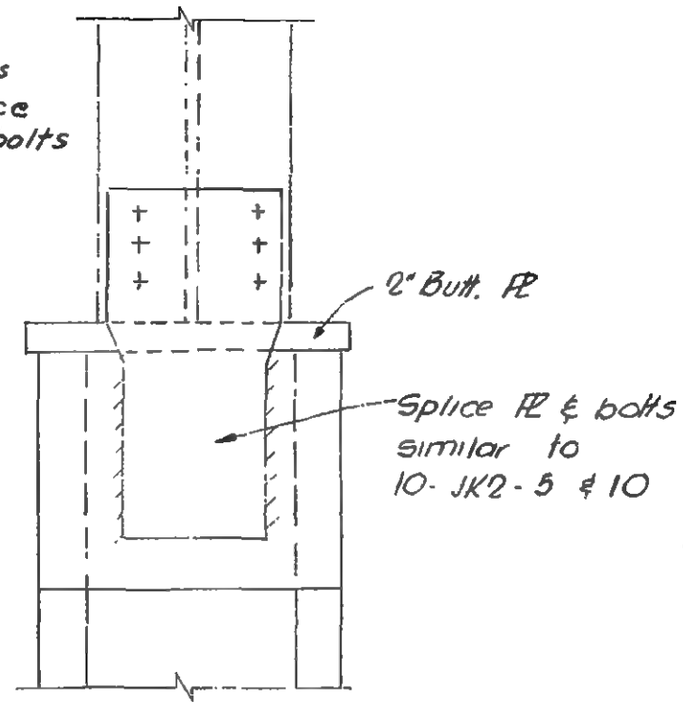

Section a-a

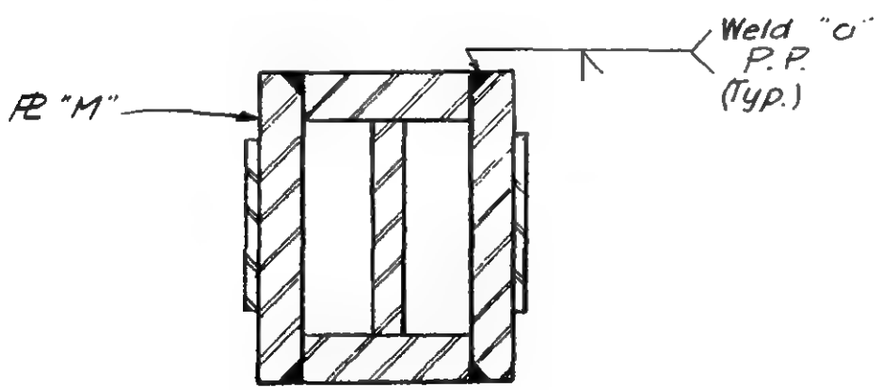

Section b-b

Notes:

1. See 10-JK2-41 for schedule
2. Pl M to have Fy same as lower col.
3. All welds to be E 70 xx

LICENSED PROFESSIONAL ENGINEER
LESLIE E. ROBERTSON
No. 34360
STATE OF NEW YORK

10-JK2-40

SKILLING - HELLE - CHRISTIANSEN - ROBERTSON Structural & Civil Engineers

PROJECT THE WORLD TRADE CENTER | TITLE COLUMN SPLICE DETAIL | DATE 6-7-68

REVISIONS

11-5-68

DETAIL NO	COLUMN SIZES UPPER	COLUMN SIZES LOWER	PL "M" t	PL "M" H	WELD "a" (P.P.)
1	14 WF 211	I 2 PL's 12 × 2 3/4 1 PL 14 1/2 × 1 1/2	2"	2'-0"	1 1/4"
2	14 WF 219	I 2 PL's 12 × 2 3/4 1 PL 14 1/2 × 1 1/2	2 1/16"	2'-4"	1 1/4"
3	14 WF 167	I 2 PL's 12 × 2 1/2 1 PL 15 × 1	1 11/16"	1'-10"	1 1/8"
4	14 WF 142	I 2 PL's 12 × 2 1 PL 16 × 1	1 1/2"	1'-10"	1"
5	14 WF 264	I 2 PL's 12 × 3 1 PL 14 × 2	2 3/8"	2'-6"	1 3/8"
6	14 WF 228	I 2 PL's 12 × 5 1 PL 10 × 3	2 1/8"	2'-4"	1 3/16"
7	14 WF 211	I 2 PL's 12 × 5 1 PL 10 × 3	2"	2'-2"	1 1/8"
8	14 WF 150	I 2 PL's 12 × 2 1 PL 16 × 1	1 9/16"	2'-0"	1"
9	14 WF 136	I 2 PL's 12 × 2 1 PL 16 × 1	1 1/2"	2'-2"	7/8"
10	14 WF 176	I 2 PL's 12 × 5 1 PL 10 × 3	1 3/4"	2'-0"	1 1/8"
11	14 WF 119	I 2 PL's 12 × 5 1 PL 10 × 3	1 3/8"	1'-10"	7/8"

LICENSED PROFESSIONAL ENGINEER
LESLIE E. ROBERTSON
No. 34360
UNIVERSITY OF THE STATE OF NEW YORK

NOTE:

1 See Detail on 10-JK2 40

10-JK2-41

SKILLING, HELLE, CHRISTIANSEN, ROBERTSON — Structural & Civil Engineers

PROJECT: THE WORLD TRADE CENTER | TITLE: COLUMN SPLICE DETAIL | DATE: 4-18-69

REVISIONS

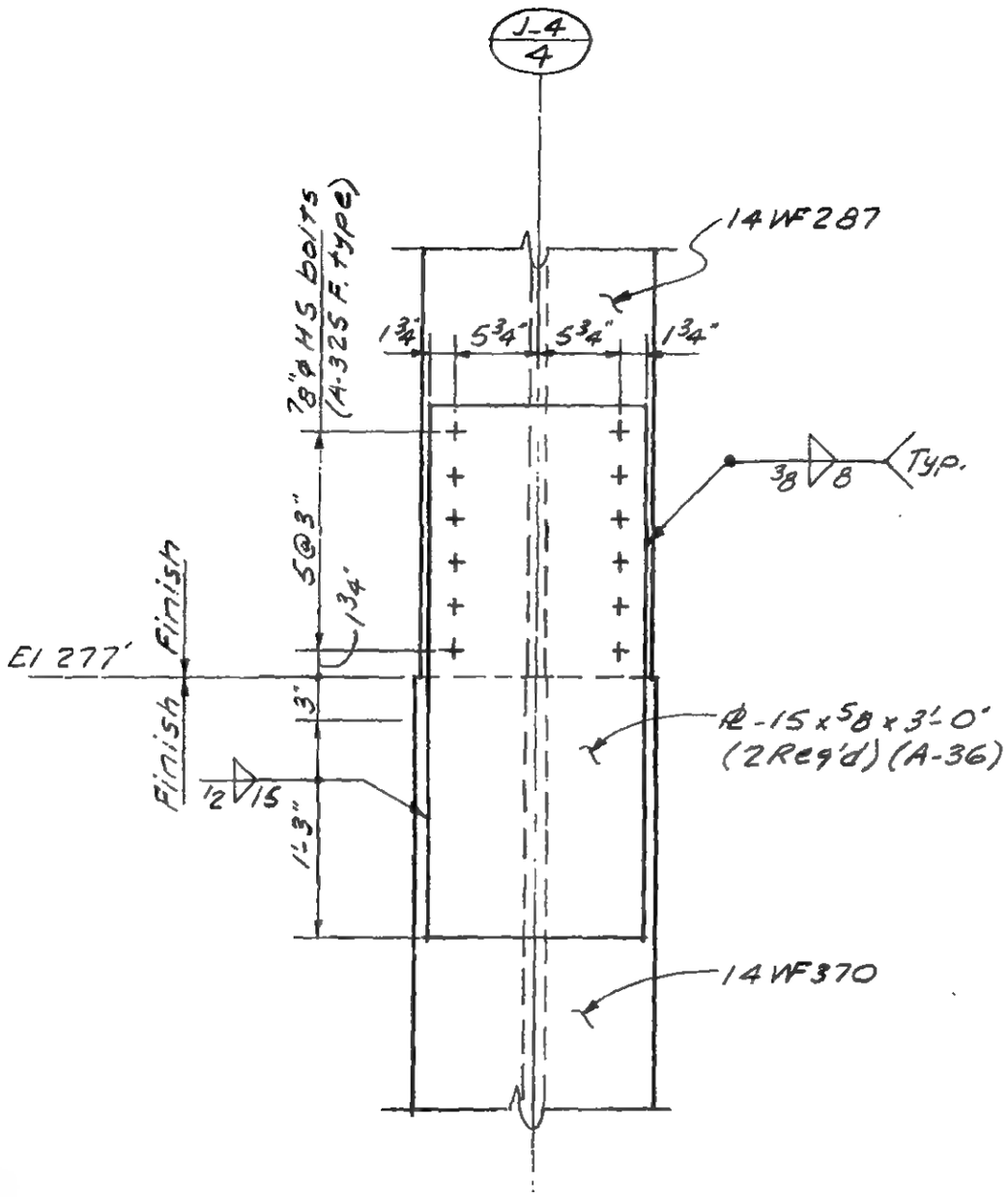

LICENSED PROFESSIONAL ENGINEER — LESLIE E. ROBERTSON — No. 34360 — UNIVERSITY OF THE STATE OF NEW YORK

DESIGNED

DRAWN: A.F.

REVIEWED: E.L.

10-JK2-42

SKILLING, HELLE, CHRISTIANSEN, ROBERTSON — Structural & Civil Engineers

PROJECT: THE WORLD TRADE CENTER | TITLE: DETAIL OF COLUMN CAP OVER COL. K44-1 | DATE: 8-10-70

REVISIONS

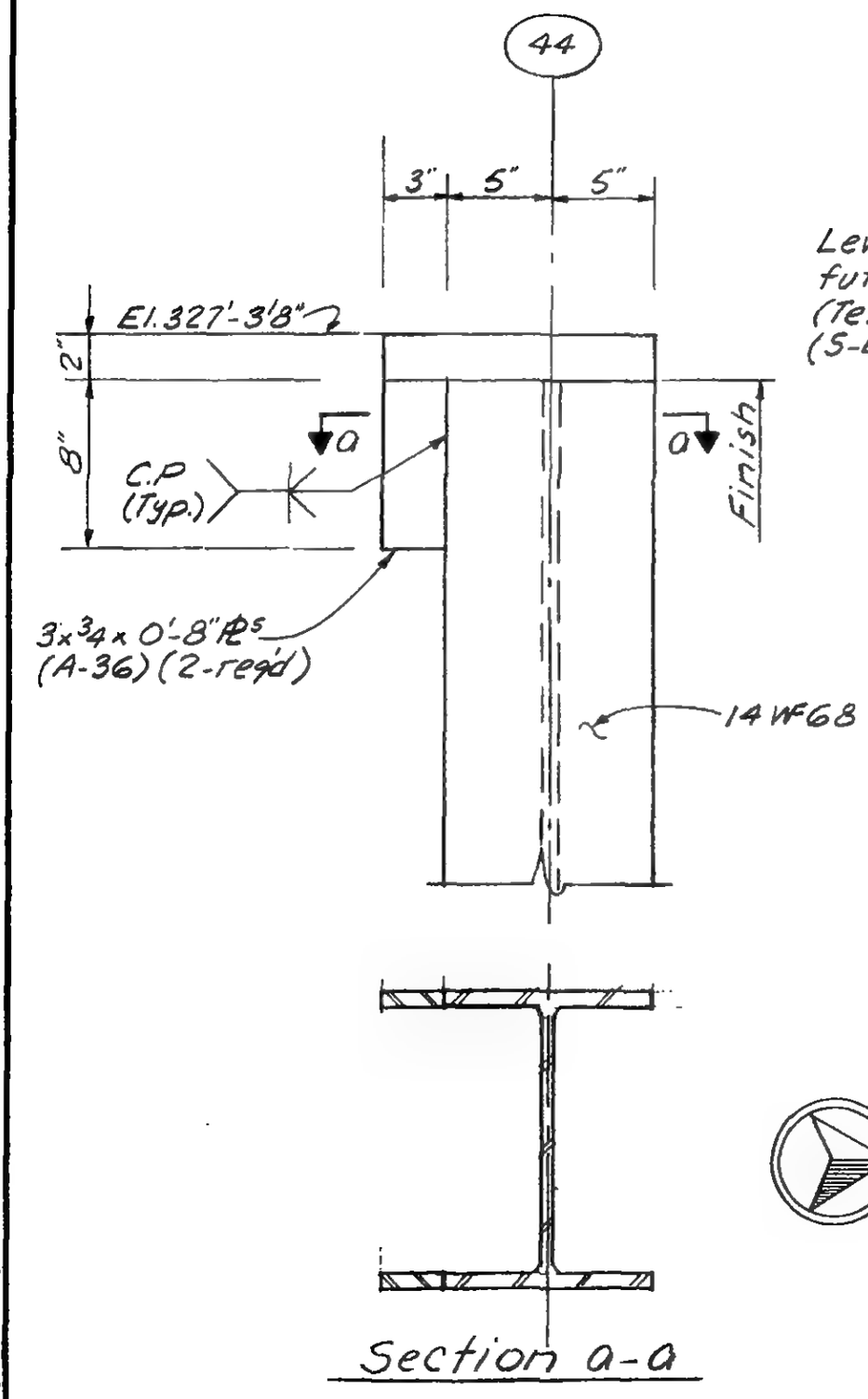

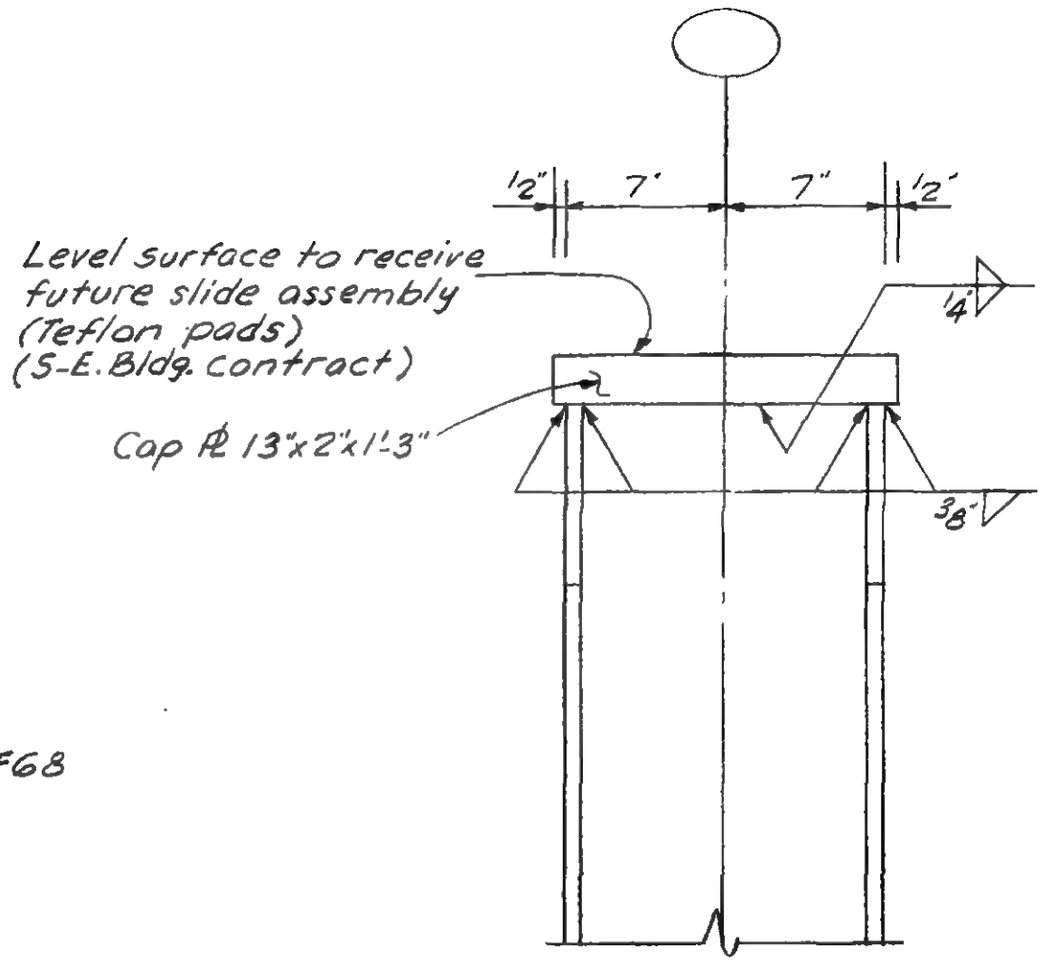

Section a-a

LICENSED PROFESSIONAL ENGINEER — LESLIE E. ROBERTSON — No. 34360 — UNIVERSITY OF THE STATE OF NEW YORK

R

DESIGNED

DRAWN: A.L. FRANQUI

REVIEWED: E. LIU

10-JK2-43

SKILLING - HELLE - CHRISTIANSEN - ROBERTSON Structural & Civil Engineers

PROJECT THE WORLD TRADE CENTER | TITLE TYPICAL DETAIL OF COLUMN BASE-PLATE | DATE 10-20-67

REVISIONS

11-8-67 Gen revisions

2-28-68

6-7-68

9-4-68

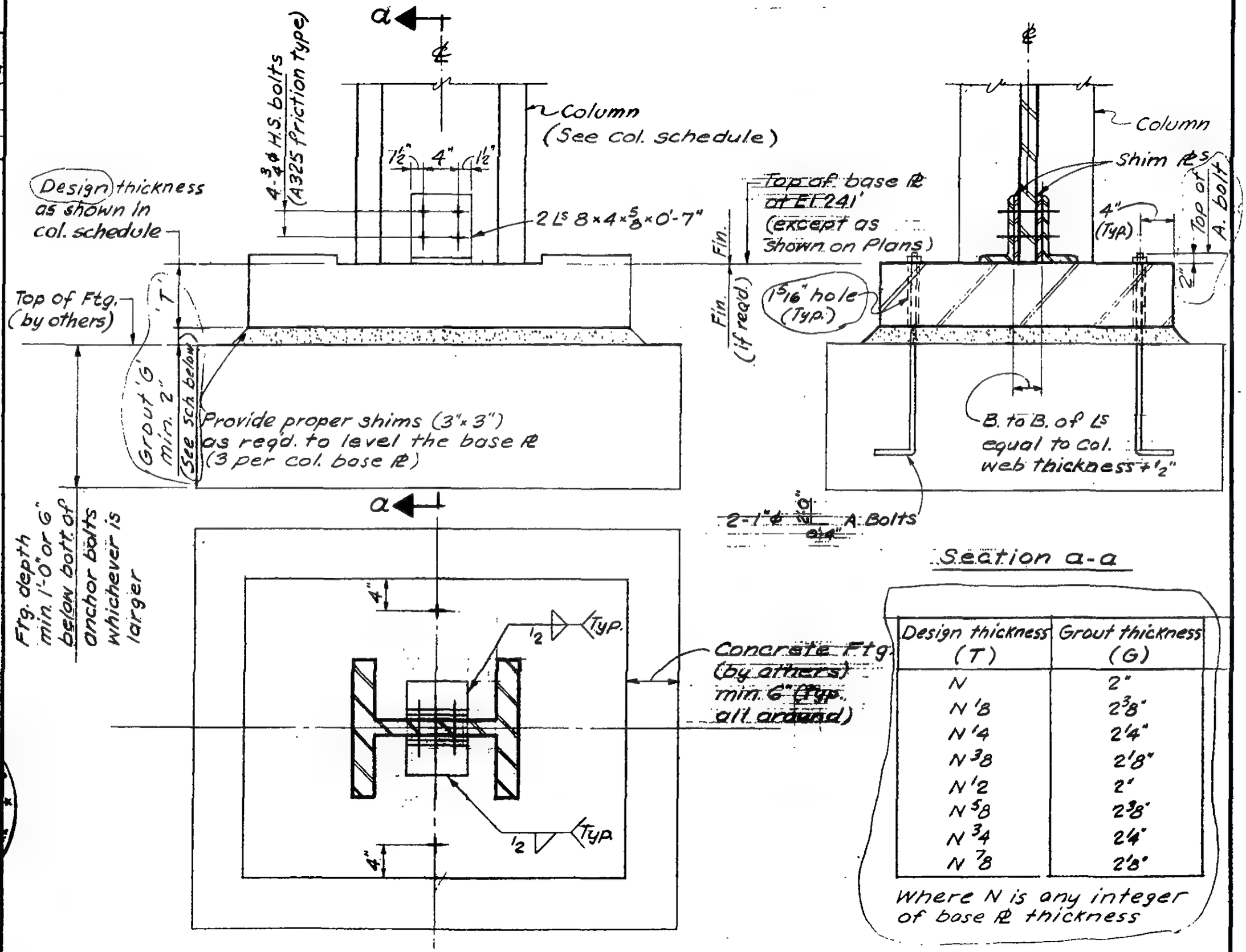

Design thickness (T)	Grout thickness (G)
N	2"
N 1/8	2 3/8"
N 1/4	2 1/4"
N 3/8	2 1/8"
N 1/2	2"
N 5/8	2 3/8"
N 3/4	2 1/4"
N 7/8	2 1/8"

Where N is any integer of base ℞ thickness

LICENSED PROFESSIONAL ENGINEER LESLIE E. ROBERTSON No. 34360 UNIVERSITY OF THE STATE OF NEW YORK

10-JK3-2

SKILLING - HELLE - CHRISTIANSEN - ROBERTSON Structural & Civil Engineers

PROJECT THE WORLD TRADE CENTER | TITLE DETAIL OF COLUMN BASE PLATE J3-14 | DATE 6-7-68

REVISIONS

9-4-68

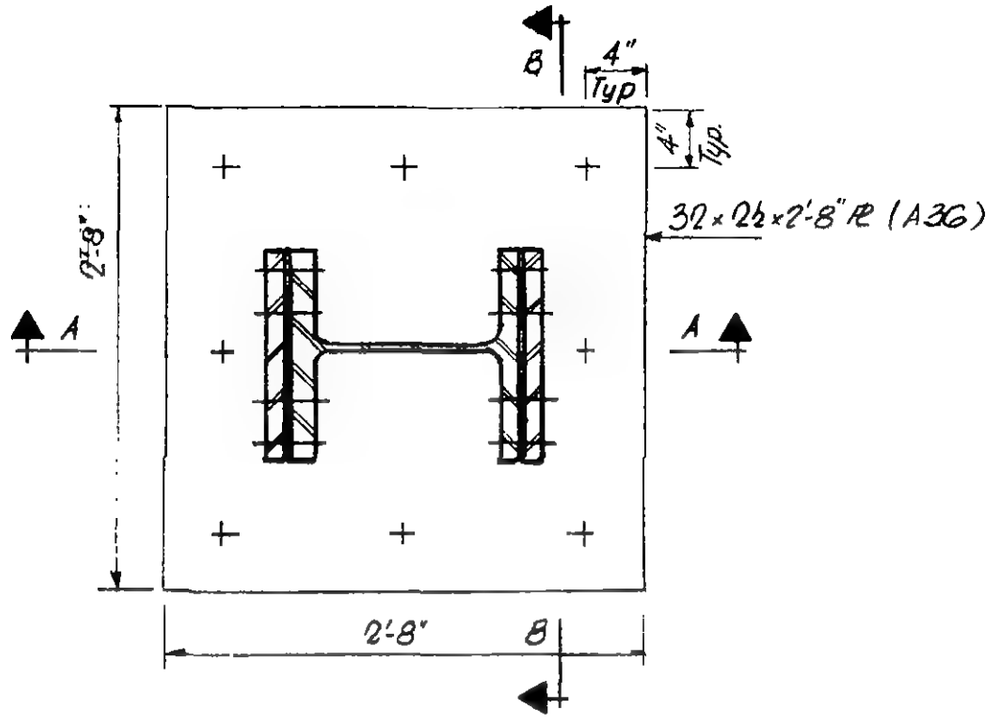

Plan

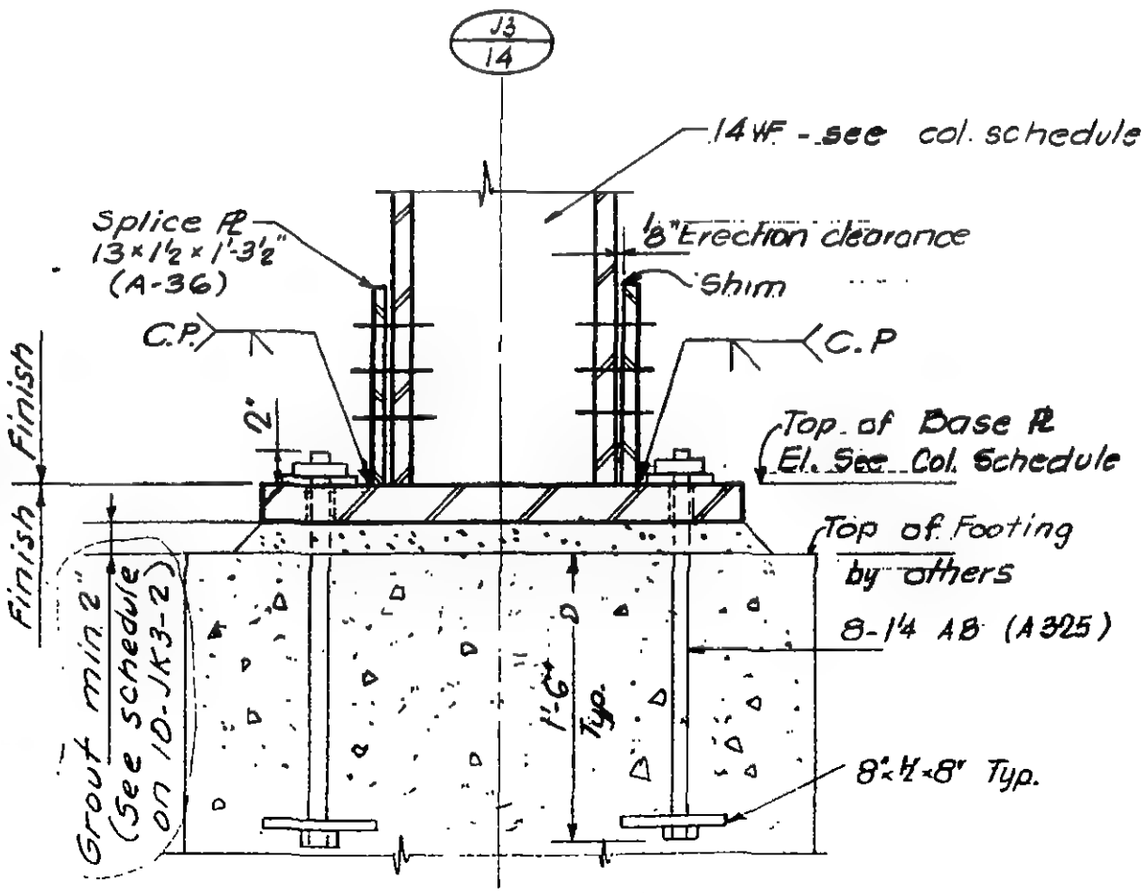

Section A-A

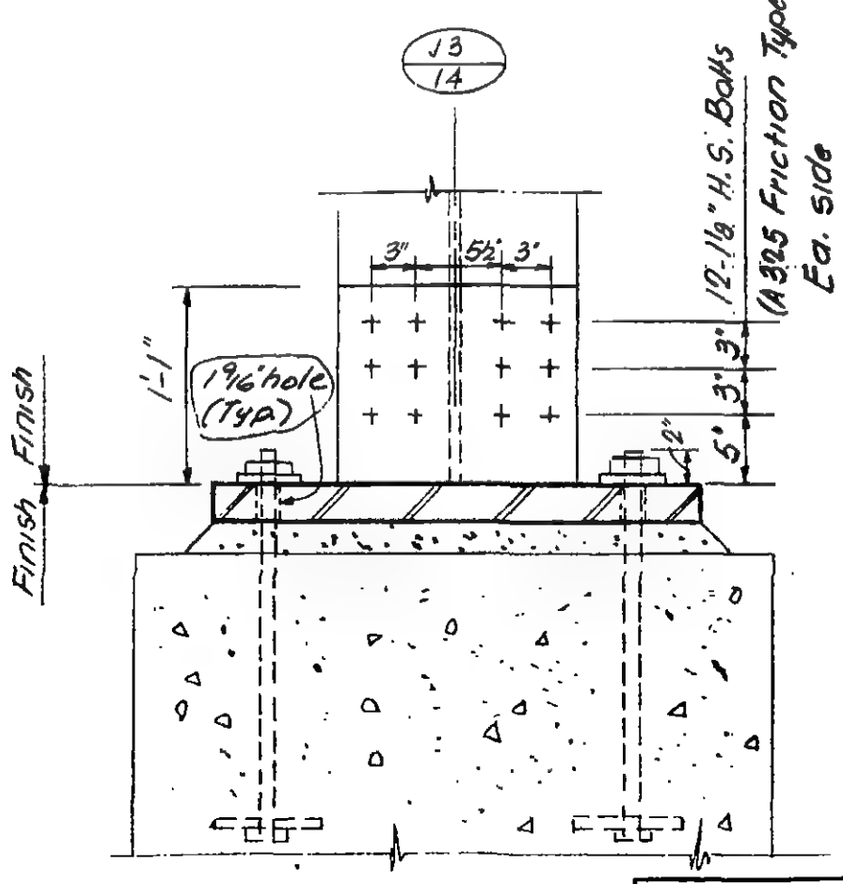

Section B-B

Notes:

1. All welds to be E 70 xx
2. Provide leveling shim PLs as shown on 10-JK3-2

LICENSED PROFESSIONAL ENGINEER
LESLIE E. ROBERTSON
No. 34980
STATE OF NEW YORK

10-JK3-2A

SKILLING - HELLE - CHRISTIANSEN - ROBERTSON Structural & Civil Engineers

PROJECT THE WORLD TRADE CENTER | TITLE COLUMN BASE PL DETAIL AT TRUCK RAMPS | DATE 6-7-68

REVISIONS

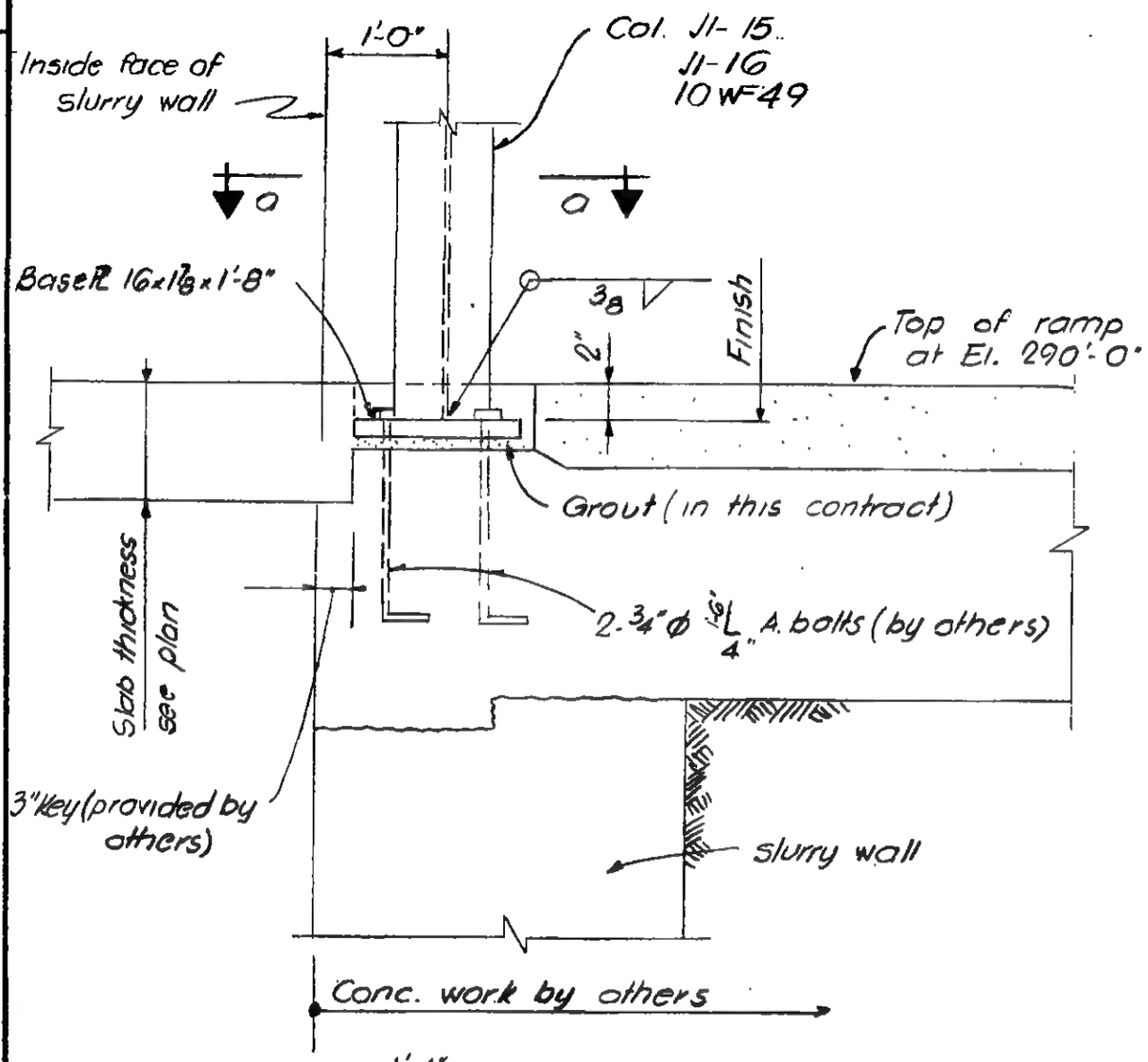

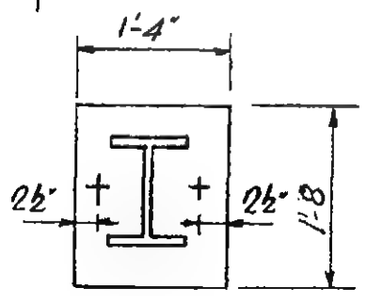

Section a-a

LICENSED PROFESSIONAL ENGINEER
LESLIE E. ROBERTSON
No. 34360
UNIVERSITY OF THE STATE OF NEW YORK

10-JK3-2B

SKILLING - HELLE - CHRISTIANSEN - ROBERTSON Structural & Civil Engineers

PROJECT THE WORLD TRADE CENTER | TITLE TYP. COLUMN BASE-Pl DET. UNDER BOX SECT. COL. | DATE 6-28-68

REVISIONS

9-4-68

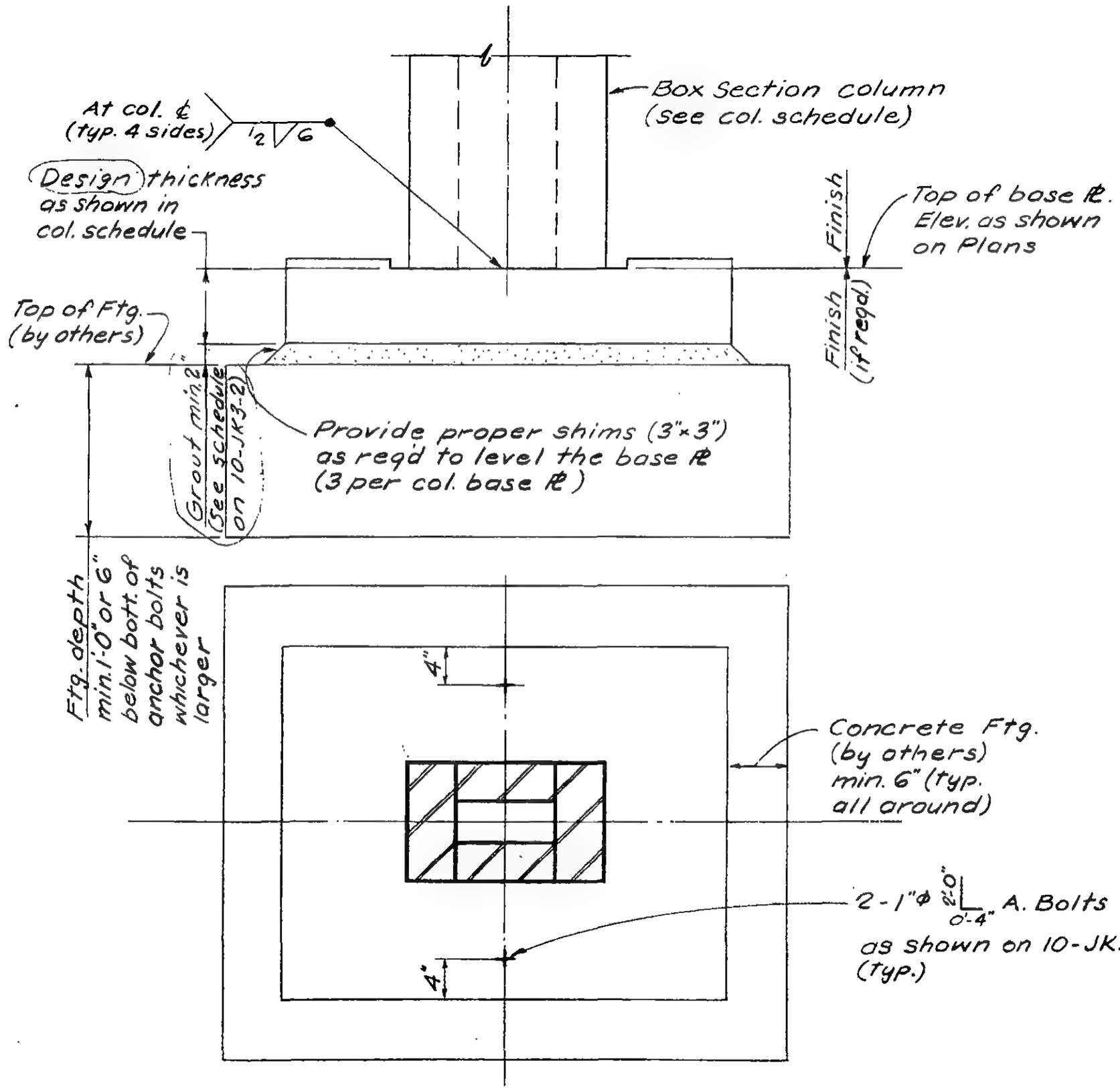

Plan

LICENSED PROFESSIONAL ENGINEER
LESLIE E. ROBERTSON
No. 34660
UNIVERSITY OF THE STATE OF NEW YORK

10-JK3-2C

SKILLING, HELLE, CHRISTIANSEN, ROBERTSON — Structural & Civil Engineers

PROJECT THE WORLD TRADE CENTER | TITLE TYP DETAIL OF COLUMN BASE - Pls (with * * as shown on plans) | DATE 8-9-68

REVISIONS

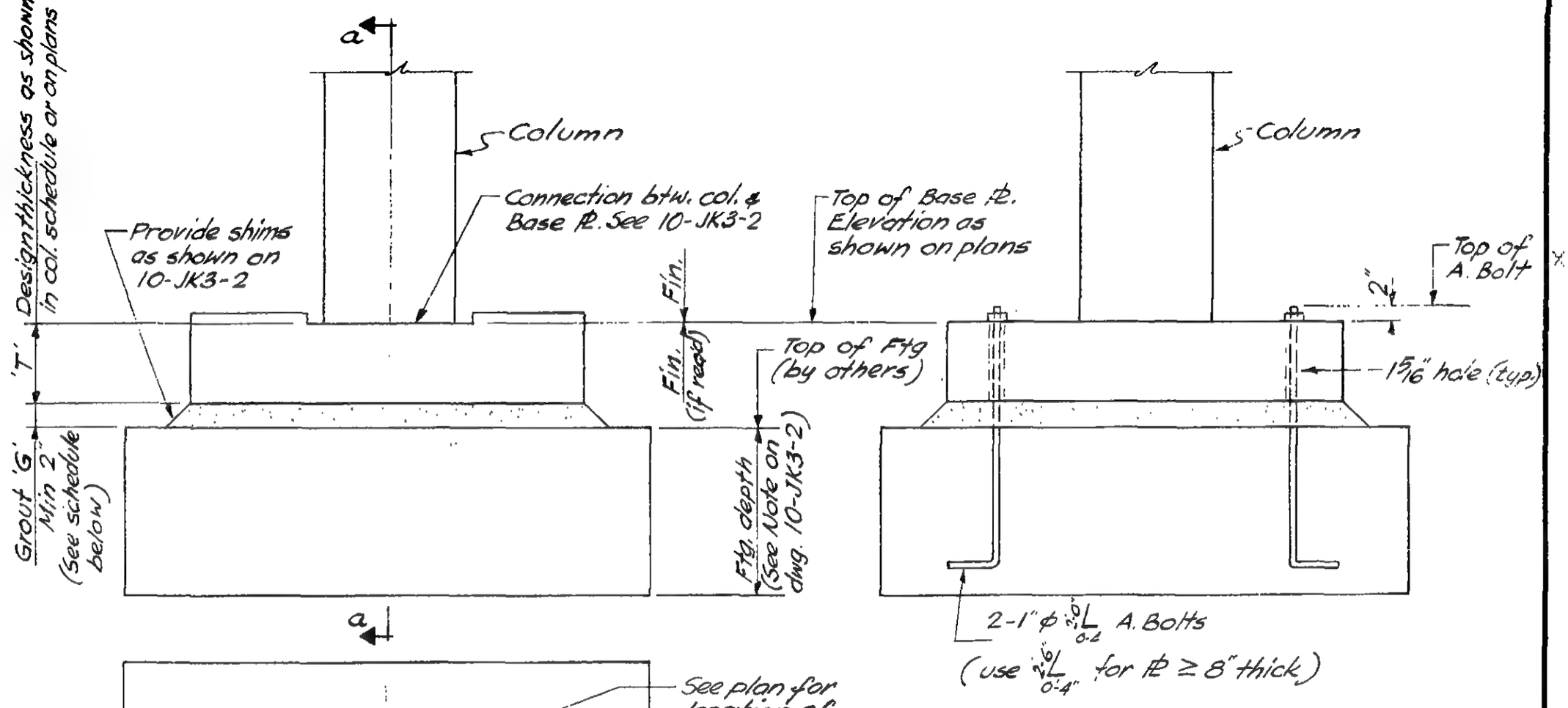

Section a-a

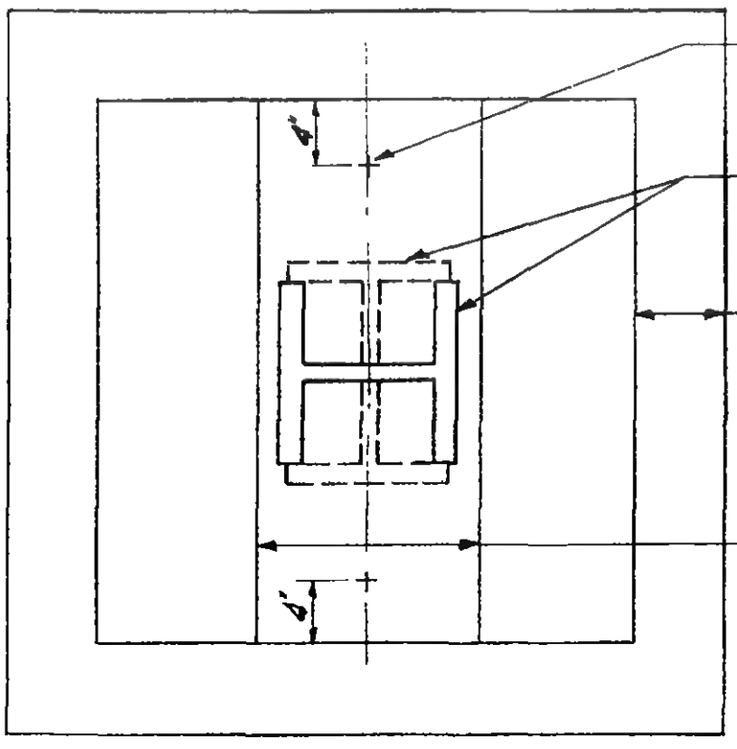

Plan

Design thickness (T)	Grout thickness (G)
N	2"
N 1/8	2 3/8"
N 1/4	2 1/4"
N 3/8	2 1/8"
N 1/2	2"
N 5/8	2 3/8"
N 3/4	2 1/4"
N 7/8	2 1/8"

Where N is any integer of Base Pl thickness

LICENSED PROFESSIONAL ENGINEER — LESLIE E. ROBERTSON — No. 34360 — UNIVERSITY OF THE STATE OF NEW YORK

DESIGNED

DRAWN

REVIEWED

10-JK3-2D

SKILLING, HELLE, CHRISTIANSEN, ROBERTSON — Structural & Civil Engineers

PROJECT: THE WORLD TRADE CENTER | TITLE: DETAIL OF COLUMN BASE PLATE M42-3 | DATE: 4-17-69

REVISIONS

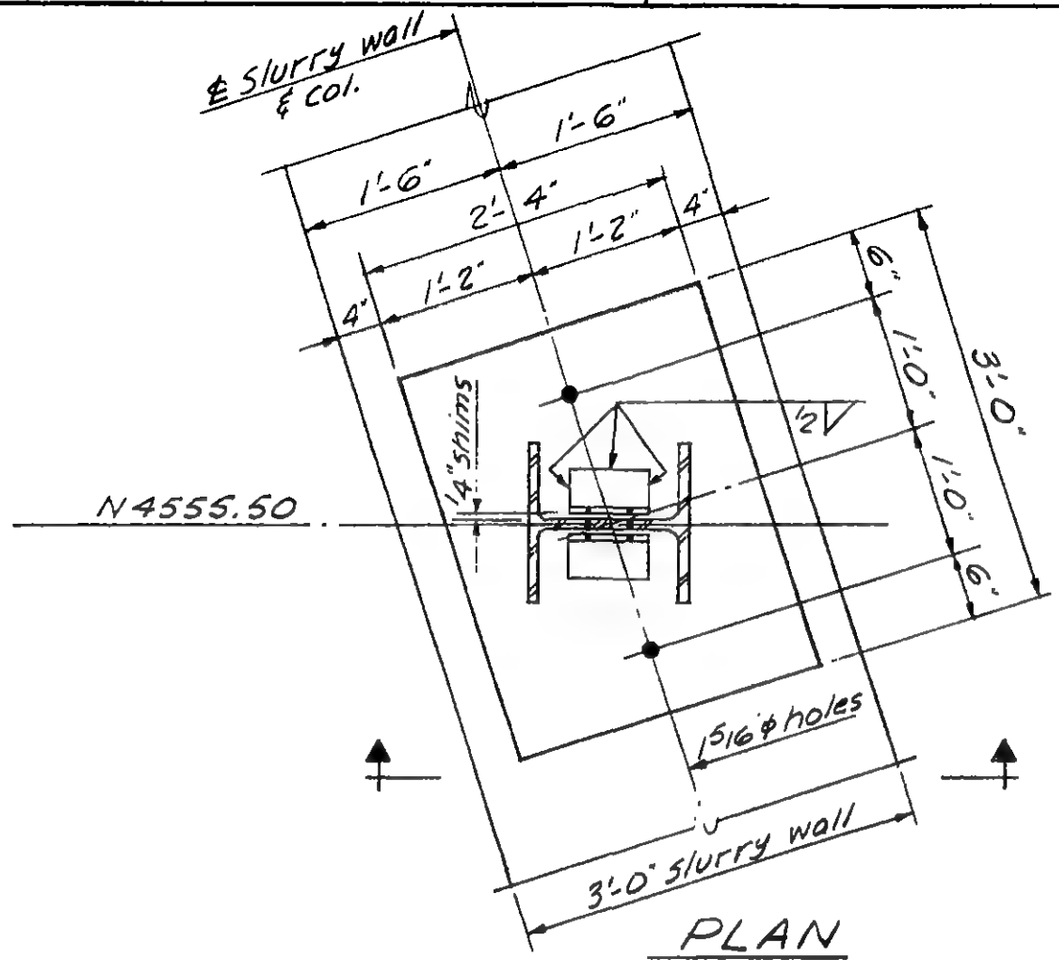

PLAN

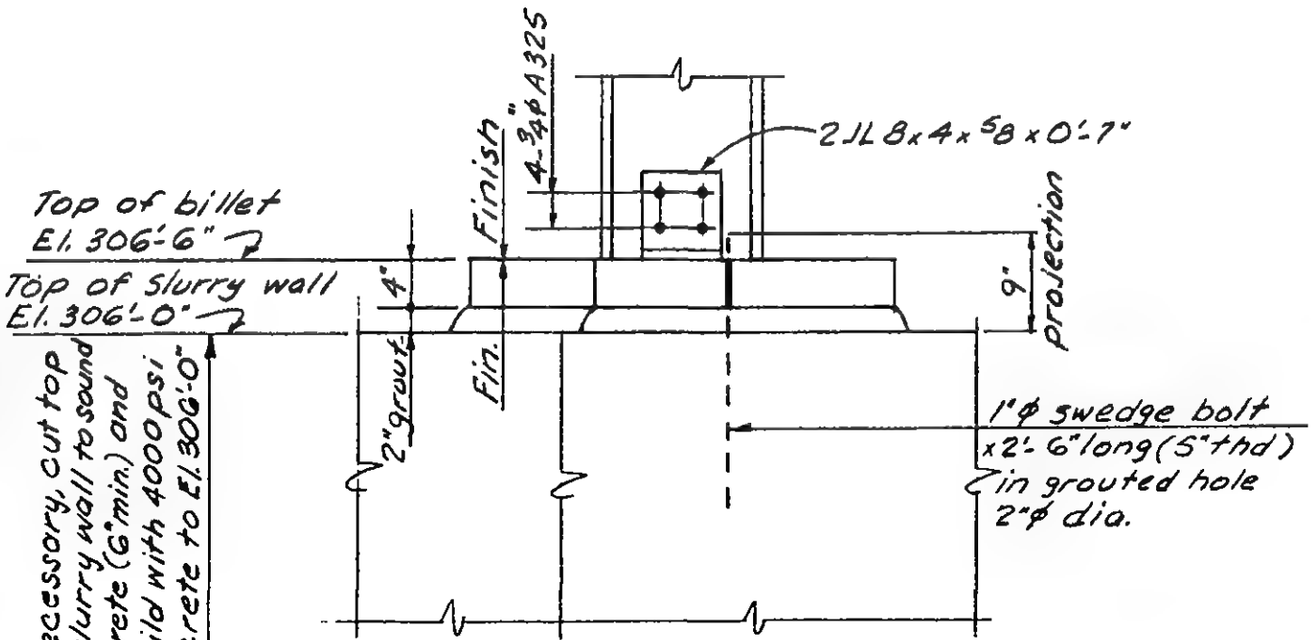

Section

Notes:
1. Provide proper shims (3"x3") as required to level the billet plate (3 req'd.)
2. All material shown to be A-36 steel.
3. All welds to be E70xx.

LICENSED PROFESSIONAL ENGINEER — LESLIE E. ROBERTSON — No. 34360 — UNIVERSITY OF THE STATE OF NEW YORK

DESIGNED

DRAWN: A.L. FRANQUI

REVIEWED: E.L.

10-JK3-2E

SKILLING, HELLE, CHRISTIANSEN, ROBERTSON — Structural & Civil Engineers

PROJECT THE WORLD TRADE CENTER | TITLE DETAIL OF COLUMN BASE M48-5 | DATE 4-17-69

REVISIONS

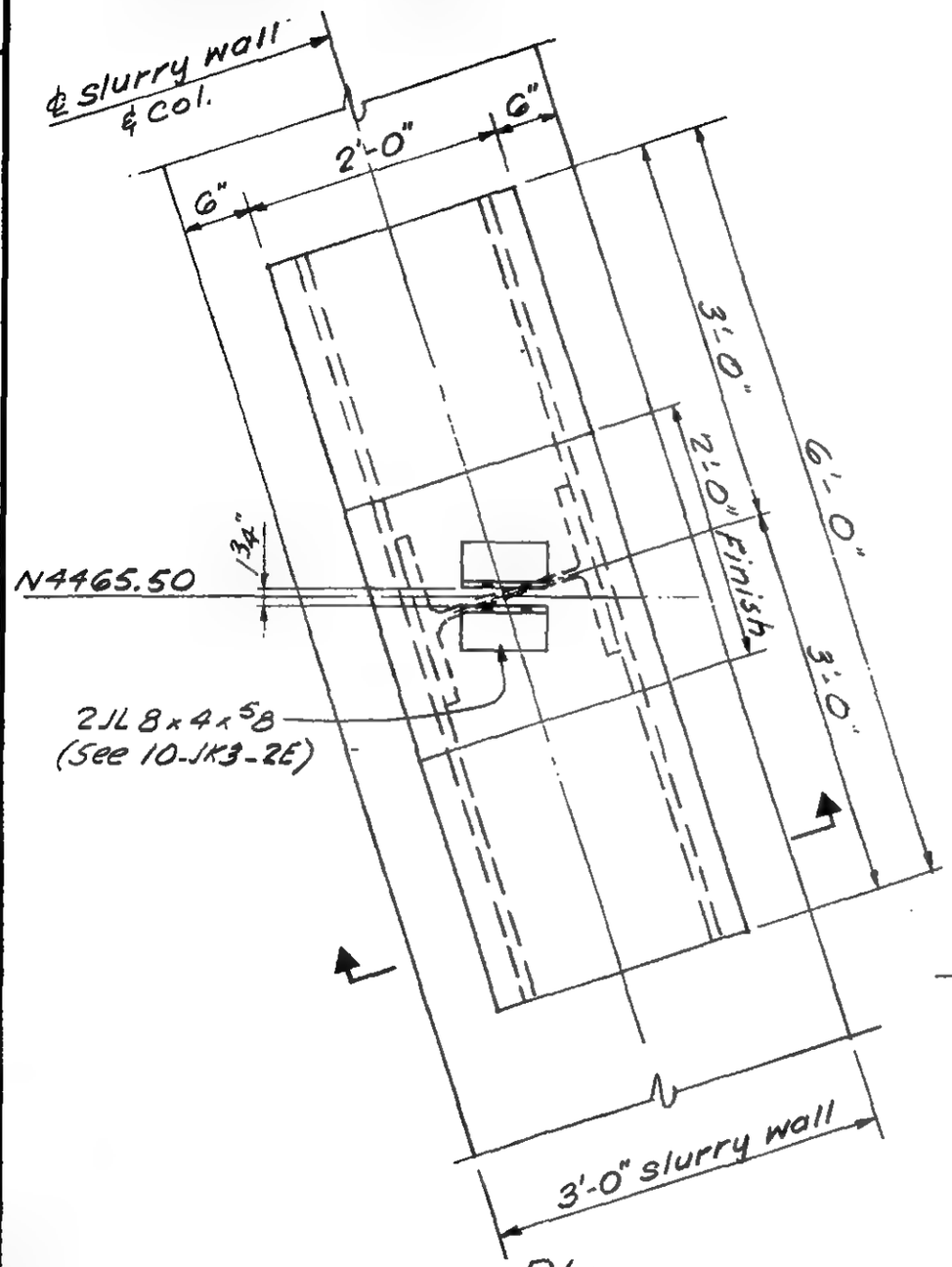

Plan
(Column not shown)

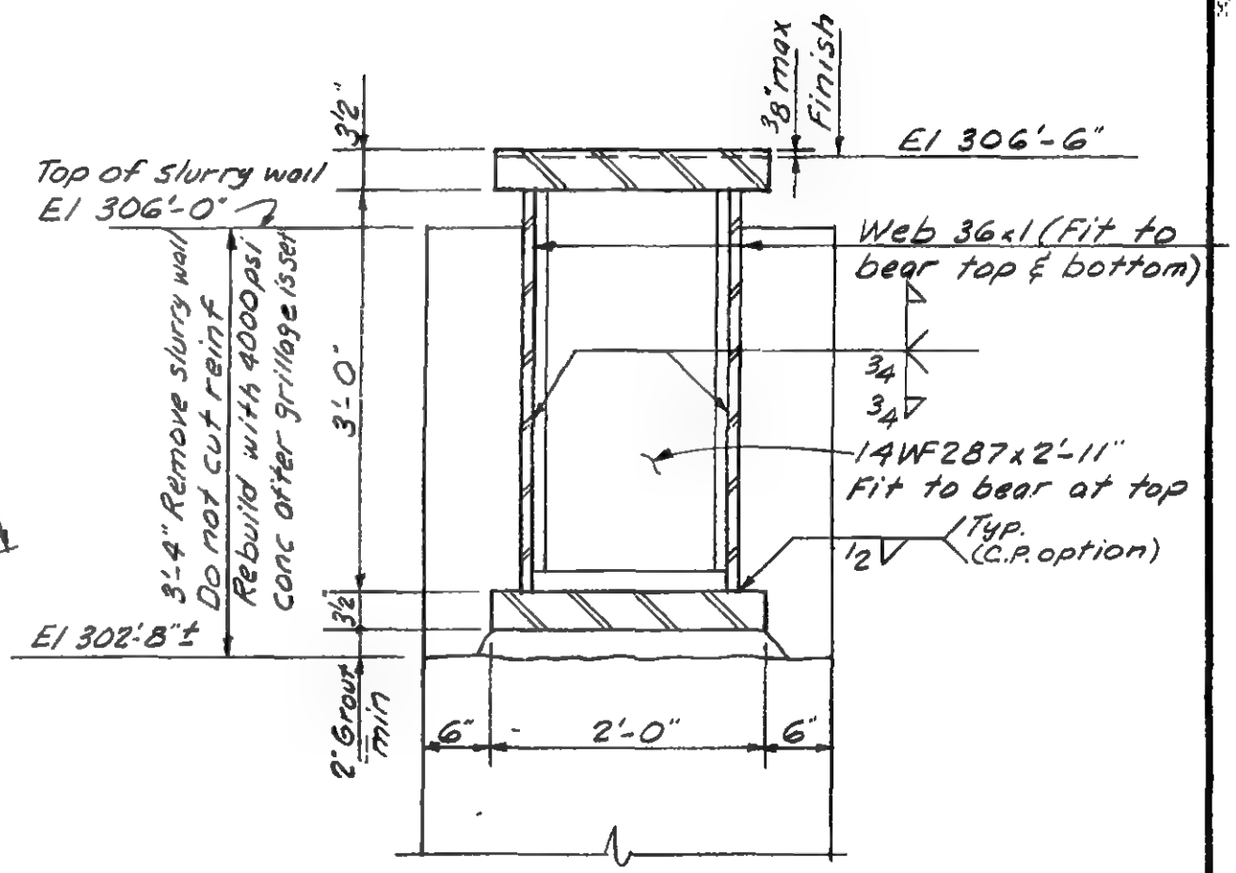

Section

Notes:
1. All material shown to be A-36 steel.
2. All welds to be E70xx.

LICENSED PROFESSIONAL ENGINEER
LESLIE E. ROBERTSON
No. 34360
UNIVERSITY OF THE STATE OF NEW YORK

DESIGNED

DRAWN S.C.

REVIEWED E.L.

10-JK3-2F

SKILLING, HELLE, CHRISTIANSEN, ROBERTSON — Structural & Civil Engineers

PROJECT: THE WORLD TRADE CENTER | TITLE: COLUMN BASE PLATE SCHEDULE AT EL. 310'-0" | DATE: 10-15-68

REVISIONS
11-5-68
3-17-69
3-19-69

COLUMN MARK	COLUMN SECTION	DETAIL TYPE	PL 'A' b	PL 'A' c	PL 'A' l	PL 'A' f	PL 'A' *t1	PL 'D' & 'E' t2	PL 'D' & 'E' m	PL 'D' & 'E' n	PL 'D' & 'E' s	H.S. BOLTS J (A-325)	H.S. BOLTS H (A-490)
C3-22	14WF87	II-A		by others				1/2"					
C4-23	14WF87	II-A		by others				1/2					
C5-22	14WF95	II-A		by others				1/2					
C6-18	14WF95	II-A		by others				1/2					
C8-16	14WF111	II-A		by others				1/2					
C8-17	14WF95	II-A		by others				1/2					
C10-5	14WF158	I-A		by others				1/2					
C10-7	14WF142	V	21	20			2	3/4	5 1/4	8 1/2	13		
C10-8	14WF127	V	20	20			2	1/2	5	8 1/2	13		
C11-10	14WF136	II-A		by others				1/2					
C12-4	14WF111	IV	20	20			2	1/2	7 1/2	3 1/2	10 1/2		
C12-5	14WF111	IV	20	20			2	1/2	7 1/2	3 1/2	10 1/2		
C12-6	14WF111	VII	20	20	10"		2	1	7 1/2	3 1/2	10	6 - 7/8" ϕ	28 - 7/8" ϕ
C12-7	14WF95	V	20	19			2	1/2	5	8 1/4	12 3/4		
J14-8	14WF193	IV	21	21			2	1/2	8 1/4	3 3/4	11 1/2		
J14-9	14WF264	VI	22	22			2	1/2	5 1/2	9	14		
J14-10	14WF202	IV	21	21			2	1/2	8 1/4	3 3/4	11 1/2		
J14-11	14WF202	VI	21	21			2	1/2	5 1/4	8 1/2	13 1/4		
J14-12	14WF264	VI	22	22			2	1/2	5 1/2	9	14		
J16-1	14WF264	VI	22	22			2	1/2	5 1/2	9	14		
J16-2	14WF202	IV	21	21			2	1/2	8 1/4	3 3/4	11 1/2		
J16-3	14WF202	VI	21	21			2	1/2	5 1/4	8 1/2	13 1/4		
J16-4	14WF264	VI	22	22			2	1/2	5 1/2	9	14		
J16-51	14WF87	VI	20	19			2	1/2	5	8	12 1/2		
J2-23B	14WF78	II	13	15			2	1/2					

Notes:
1. All plates to have Fy = 42 ksi.
2. All welds to be E 70XX.
3. See Dwgs. 10-JK3-4 thru 10 for type & details.
4. Columns with "C" designation, by others.
5. * — In no case shall t_1 be less than thickness of beam cover PL, if any.

LICENSED PROFESSIONAL ENGINEER — LESLIE E. ROBERTSON — No. 34360 — STATE OF NEW YORK

DESIGNED
DRAWN S.C.
REVIEWED E.L.

10-JK3-3

SKILLING, HELLE, CHRISTIANSEN, ROBERTSON — Structural & Civil Engineers

PROJECT: THE WORLD TRADE CENTER | TITLE: COLUMN BASE PLATE SCHEDULE AT EL. 310'-0" | DATE: 10-15-68

REVISIONS
11-5-68
3-17-69
3-19-69

COLUMN MARK	COLUMN SECTION	DETAIL TYPE	PL 'A' b	PL 'A' c	PL 'A' l	PL 'A' f	PL 'A' *t1	PL 'D' & 'E' t2	PL 'D' & 'E' m	PL 'D' & 'E' n	PL 'D' & 'E' s	H.S. BOLTS J (A-325)	H.S. BOLTS H (A-490)
J 18-1	14 WF 228	IV	22"	22"			2"	½"	8¼"	3¾"	11½"		
J 18-2	14 WF 84	VI	17	19			2	½	5	8	12½		
J 18-3	14 WF 84	IV	19	17			2	½	8¼	3¾	11½		
J 18-4	14 WF 228	IV	22	22			2	½	8¼	3¾	11½		
J 18-51	14 WF 87	VI	20	19			2	½	5	8	12½		
J 20-1	14 WF 228	IV	22	22			2	½	8¼	3¾	11½		
J 20-2	14 WF 87	VI	20	19			2	½	5	8	12½		
J 20-3	14 WF 87	VII	26	19	10"	10"	2	1	6¼	7½	12¾	6-⅞"ϕ	28-⅞"ϕ
J 20-4	14 WF 228	VII	22	22	11	9	2	1	7¾	4½	11¼	6-⅞"ϕ	28-⅞"ϕ
J 20-51	14 WF 87	VI	20	19			2	½	5	8	12½		
J 22-1	14 WF 87	V	20	19			2	½	5	8	12½		
J 22-2	14 WF 228	VI	22	22	cut corner of PL at girder J6N		2⅛	½	5½	9	14		
E 22-3	14 WF 95	V	19	20			2	½	7½	3½	10½		
J 23-5	14 WF 87	V	19	20			2	½	7½	3½	10½		
J 23-6	14 WF 228	VII A	22	22	11	6	2	1	7½	8½	15	6-¾"ϕ	14-⅞"ϕ
J 23-7	14 WF 111	VII A	20	20	10	6	2	1	7½	3½	10	6-¾"ϕ	14-⅞"ϕ
K 26-1	14 WF 202	VI	21	21			2	½	5¼	8½	13¼		
K 26-2	14 WF 264	VI	22	22			2	½	5½	9	14		
K 26-3	14 WF 202	VI	21	21			2	½	5¼	8½	13¼		
K 26-4	14 WF 202	VI	21	21			2	½	5¼	8½	13¼		
K 26-5	14 WF 264	VII	28	22	11	11	2	1	8	8	15	6-⅞"ϕ	28-⅞"ϕ
K 26-6	14 WF 202	VI	21	21			2	½	5¼	8½	13¼		
K 26-7	14 WF 314	VI	22	23			2	½	5	9	13½		
K 28-1	14 WF 202	III	17	17			2	½					
K 28-2	14 WF 264	IV	22	22			2	½	8¼	3¾	11½		
K 28-3	14 WF 202	VI	21	21			2	½	5¼	8½	13¼		
K 28-4	14 WF 202	VI	21	21			2	½	5¼	8½	13¼		
K 28-5	14 WF 264	VI	22	22			2	½	5½	9	14		
K 28-6	14 WF 202	V	21	21			2	½	5¼	8½	13¼		

Notes:
1. All plates to have Fy = 42 ksi.
2. All welds to be E 70XX.
3. See Dwgs. 10-JK3-4 thru 10 for type & details.
4. Columns with "E" designation, by others.
5. * — In no case shall t1 be less than thickness of beam cover PL, if any.

LICENSED PROFESSIONAL ENGINEER — LESLIE E. ROBERTSON — No. 34360 — UNIVERSITY OF THE STATE OF NEW YORK

DESIGNED
DRAWN S.C.
REVIEWED E.L.

10-JK3-3A

SKILLING, HELLE, CHRISTIANSEN, ROBERTSON — Structural & Civil Engineers

PROJECT: THE WORLD TRADE CENTER | TITLE: COLUMN BASE PLATE SCHEDULE AT EL. 310'-0" | DATE: 10-15-68

REVISIONS
11-5-68
3-17-69
4-14-70

COLUMN MARK	COLUMN SECTION	DETAIL TYPE	Æ 'A' b	c	ℓ	f	*t_1	Æ 'D' & 'E' t_2	m	n	s	H.S. BOLTS J (A-325)	H (A-490)
K 28 - 7	14 WF 264	IV	22"	22"			2"	½"	8¼"	3¾"	11½"		
K 30 - 1	14 WF 84	II	13	16			2	½					
K 30 - 2	14 WF 228	V	22	22			2	½	5¼	8½	13¼		
K 30 - 3	14 WF 84	IV	19	17			2	½	7	2¾	9¼		
K 30 - 4	14 WF 84	VII A	19	17	9½"	6"	2	1	6¾	5½	11¼	6 - ¾" Φ	14 - 1" Φ
K 30 - 5	14 WF 228	VI	22	22			2	1	7½	2½	15		
K 30 - 6	14 WF 84	VII A	20	19	8½		2	1	5½	7½	12	6 - ¾ P	14 - ⅞ P
K 30 - 7	14 WF 228	IV	22	22			2	½	8¼	3¾	11½		
K 33 - 1	14 WF 87	II	16	15			2	½					
K 33 - 2	14 WF 228	IV	22	22			2	½	8¼	3¾	11½		
K 33 - 3	14 WF 87	VII A	19	20	9½	6	2	1	7½	5	11½	6 - ¾" Φ	14 - 1⅛" Φ
K 33 - 4	14 WF 87	VII A	26	20	9½	6	2	1	7½	5	11½	6 - ¾ P	14 - 1⅛" P
K 33 - 5	14 WF 228	VII A	22	22	11		2	1	5½	8½	13¼	6 - ¾" Φ	14 - ⅞" Φ
K 33 - 6	14 WF 87	VII	25	20	9½	9½	2	1	7½	6	12½	6 - ¾" Φ	28 - 1" Φ
K 33 - 7	14 WF 228	IV	22	22			2	½	8¼	3¾	11½		
K 36 - 1	14 WF 87	II	16	15			2	½					
K 36 - 2	14 WF 228	II	17	17			2	½					
K 36 - 3	14 WF 87	V	20	19			2	½	5	8	12½		
K 36 - 4	14 WF 87	VII	28	19	10	9	2	1	5½	7½	12	6 - 1" P	28 - ⅞ P
K 36 - 5	14 WF 228	IV	22	22			2	½	8¼	3¾	11½		
K 36 - 6	14 WF 87	VII A	24½	20	9¾	6	2	1	6	7½	12½	6 - ¾" Φ	14 - 1" P
K 36 - 7	14 WF 228	VII	32	22	11	11	2	1	7¾	4½	11¼	6 - ¾ P	28 - ⅞" Φ
M 36 - 8	14 WF 127	V	19½	19½			2	½	5	8	12½		
K 39 - 1	14 WF 202	II	18	17			2	½					
K 39 - 2	14 WF 264	I	18	17			2	½					
K 39 - 3	14 WF 202	V	21	21			2	½	8	3½	10½		
K 39 - 4	14 WF 202	VI	21	21			2	½	5¼	8½	13¼		
K 39 - 5	14 WF 264	VI	22	22			2	½	5½	9	14		
K 39 - 6	14 WF 202	V	21	21			2	½	8	3½	10½		
K 39 - 7	14 WF 264	VI	22	22			2	½	5½	9	14		

LICENSED PROFESSIONAL ENGINEER — LESLIE E. ROBERTSON — No. 34360 — UNIVERSITY OF THE STATE OF NEW YORK

Notes:

1. All plates to have Fy = 42 ksi.
2. All welds to be E 70XX.
3. See Dwgs. 10-JK3-4 thru 10 for type & details.
4. Columns with "M" designation, by others.
5. * — In no case shall t_1 be less than thickness of beam cover Æ, if any.

DESIGNED
DRAWN S.C.
REVIEWED E.L.

10-JK3-3B

SKILLING, HELLE, CHRISTIANSEN, ROBERTSON — Structural & Civil Engineers

PROJECT: THE WORLD TRADE CENTER | TITLE: COLUMN BASE PLATE SCHEDULE AT EL. 310'-0" | DATE: 11-5-68

REVISIONS
3-17-69
3-21-69

COLUMN MARK	COLUMN SECTION	DETAIL TYPE	PL 'A' b	PL 'A' c	PL 'A' l	PL 'A' f	PL 'A' *t1	PL 'D' & 'E' t2	PL 'D' & 'E' m	PL 'D' & 'E' n	PL 'D' & 'E' s	H.S. BOLTS J (A-325)	H.S. BOLTS H (A-490)
M39-8	14WF127	V	19½"	19½"			2"	½"	5"	8"	12½"		
K53-8	14WF74	II	11"	15"			2"	½"					
K55-7	14WF74	II	11"	15"			2"	½"					
K57-7	14WF74	II	11"	15"			2"	½"					

Notes:

1. All plates to have Fy = 42 ksi.
2. All welds to be E 70XX.
3. See Dwgs. 10-JK3-4 thru 10 for type & details.
4. Columns with "M" designation, by others.
5. * — In no case shall t1 be less than thickness of beam cover PL, if any.

LICENSED PROFESSIONAL ENGINEER — LESLIE E. ROBERTSON — No. 34360 — UNIVERSITY OF THE STATE OF NEW YORK

DESIGNED
DRAWN S.C.
REVIEWED E.L.

10-JK3-3C

SKILLING, HELLE, CHRISTIANSEN, ROBERTSON — Structural & Civil Engineers

PROJECT THE WORLD TRADE CENTER | TITLE COLUMN BASE PLATE DETAIL AT EL. 310'-0" | DATE 10-15-68

REVISIONS

11-5-68

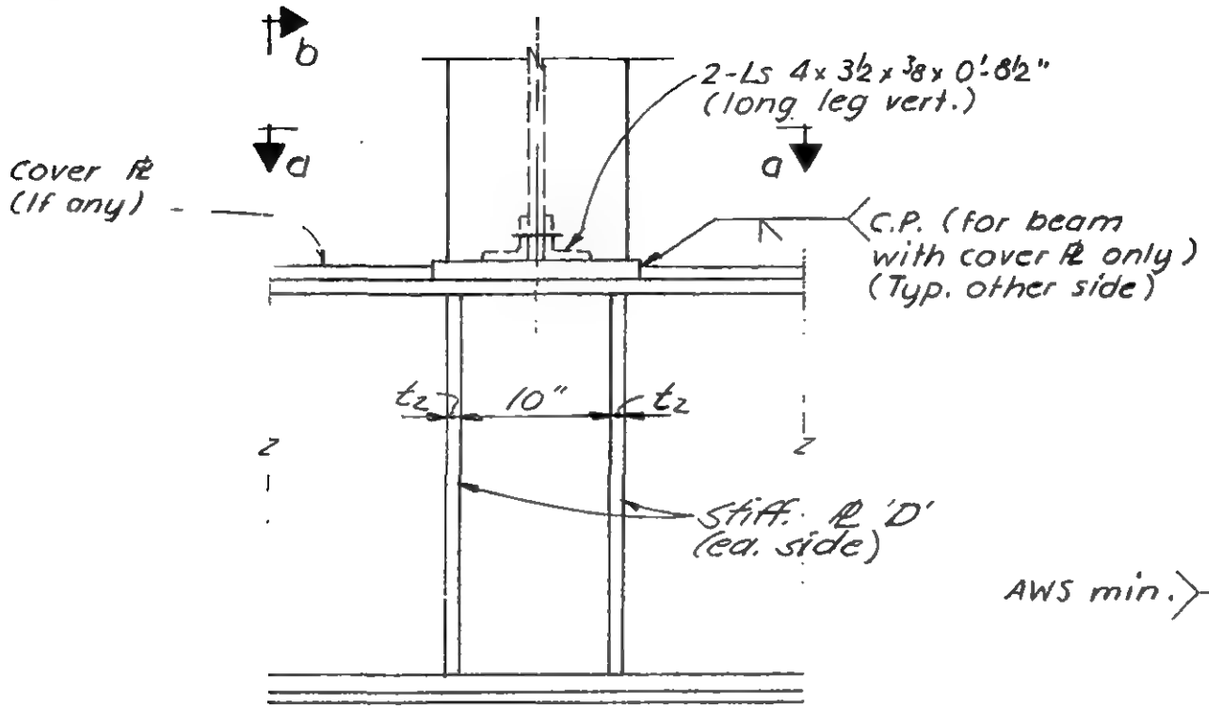

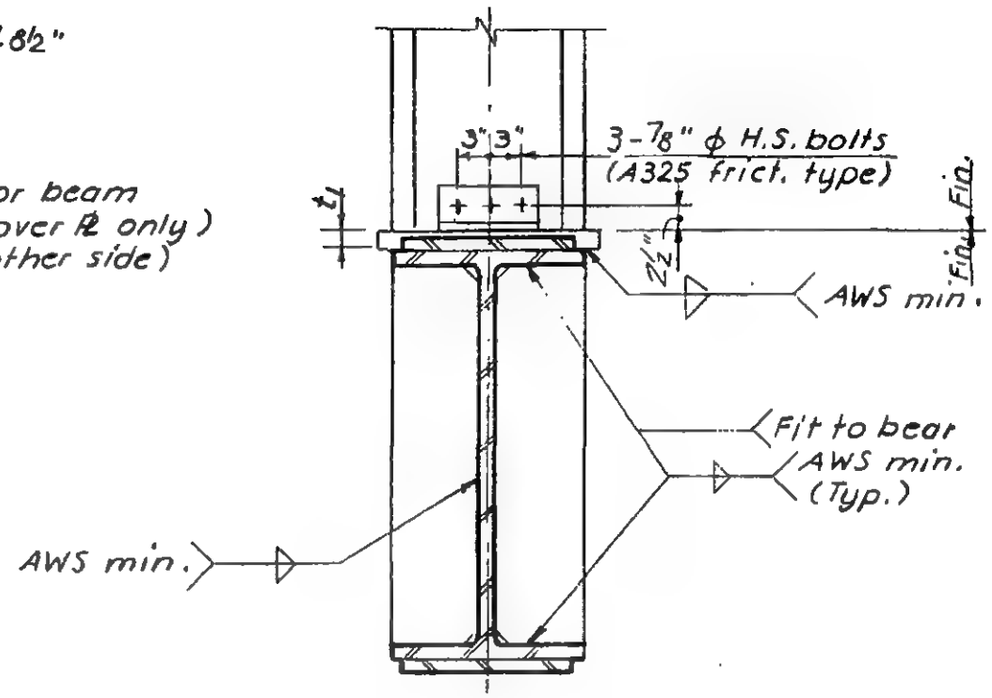

Type I

Section b-b

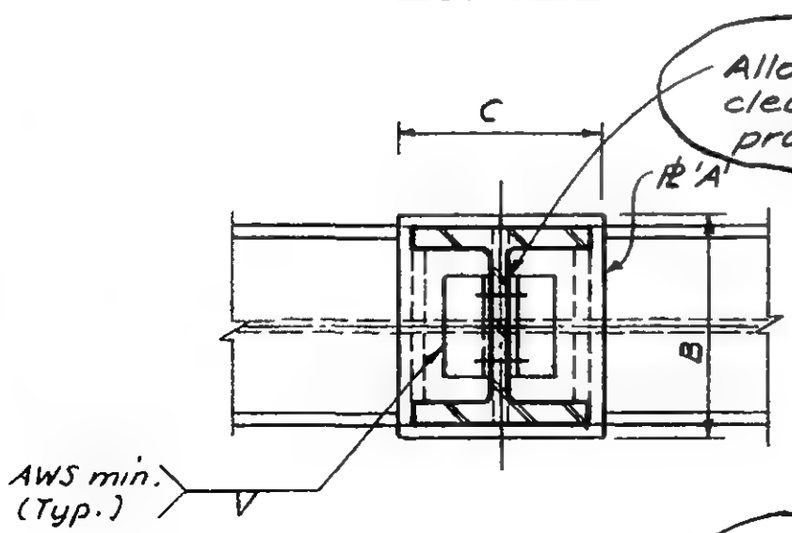

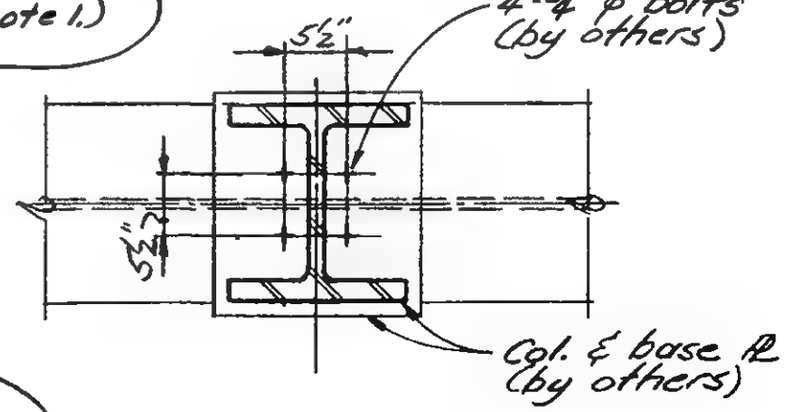

Section a-a

Type I-A

NOTES:
1. For columns with designation other than "J" or "K," fill Pls & bolts to be provided by others.

LICENSED PROFESSIONAL ENGINEER
LESLIE E. ROBERTSON
No. 34960
UNIVERSITY OF THE STATE OF NEW YORK

DESIGNED

DRAWN

REVIEWED

10-JK3-4

SKILLING, HELLE, CHRISTIANSEN, ROBERTSON — Structural & Civil Engineers

PROJECT: THE WORLD TRADE CENTER | TITLE: COLUMN BASE PLATE DETAIL AT EL. 310'-0" | DATE: 10-15-68

REVISIONS

11-5-68

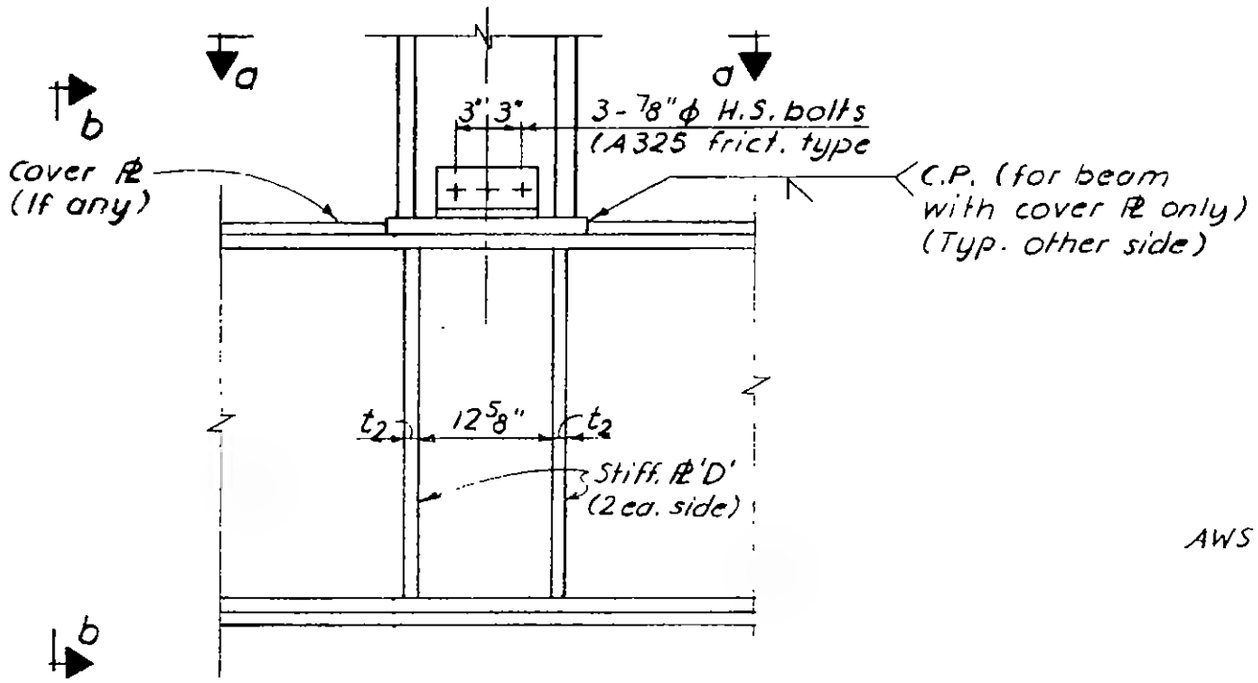

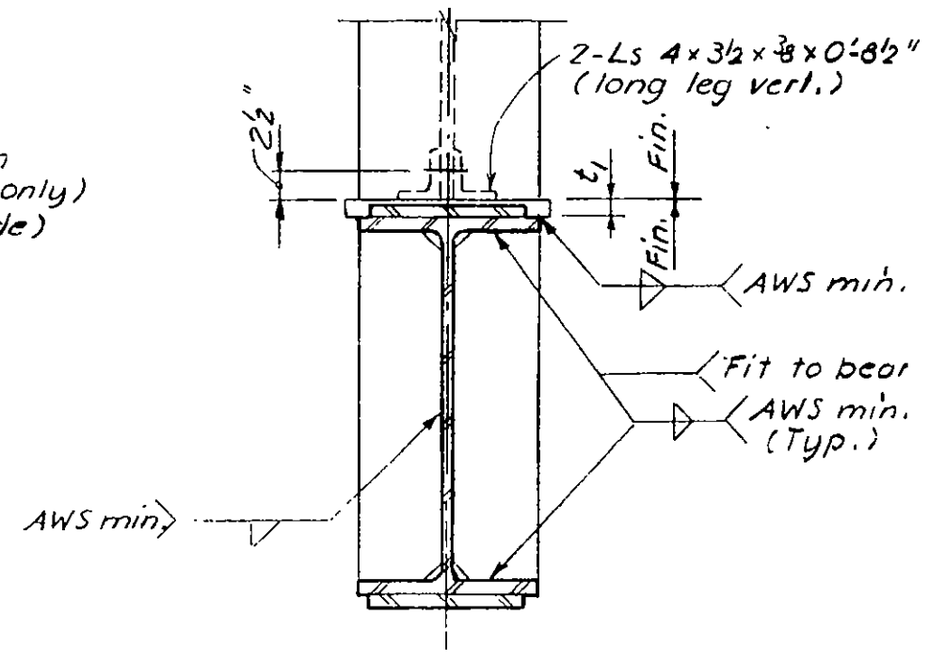

Section b-b

Type II

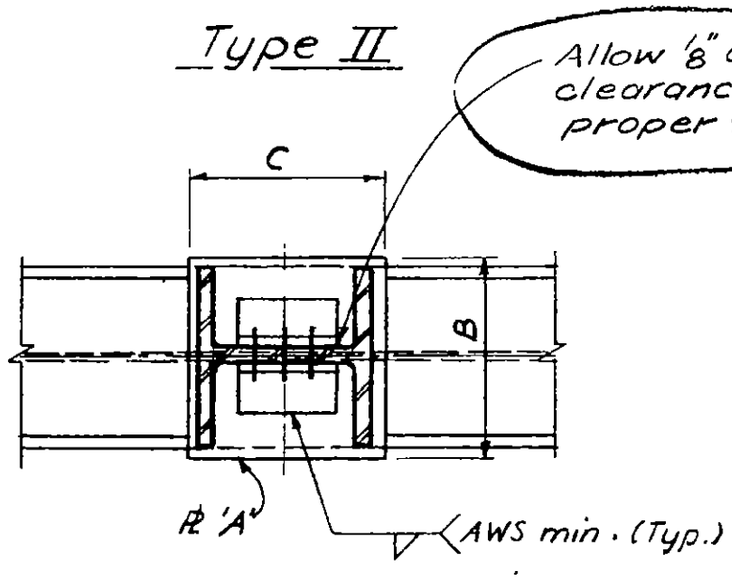

Section a-a

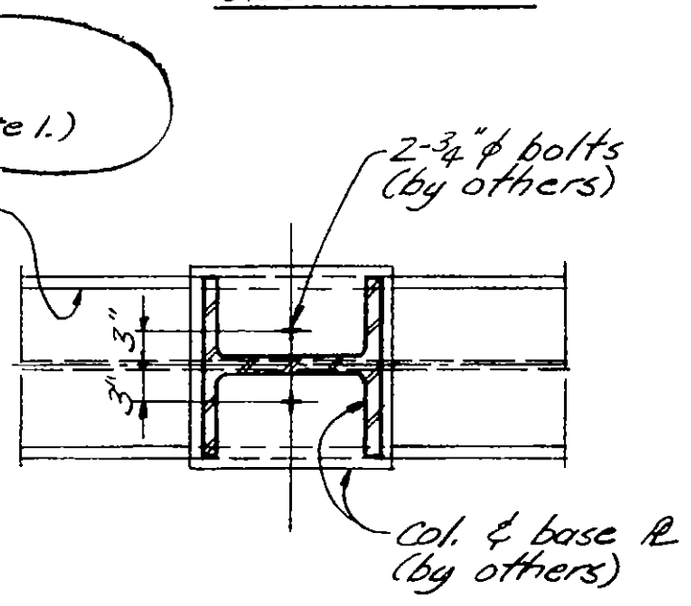

Type II-A

NOTES:

1. For columns with designation other than "J" or "K", fill Pls & bolts to be provided by others.

LICENSED PROFESSIONAL ENGINEER — LESLIE E. ROBERTSON — No. 34960 — STATE OF NEW YORK

DESIGNED

DRAWN

REVIEWED

10-JK3-5

SKILLING, HELLE, CHRISTIANSEN, ROBERTSON — Structural & Civil Engineers

PROJECT THE WORLD TRADE CENTER | TITLE COLUMN BASE PLATE DETAIL AT EL. 310'-0" | DATE 10-15-68

REVISIONS

11-5-68

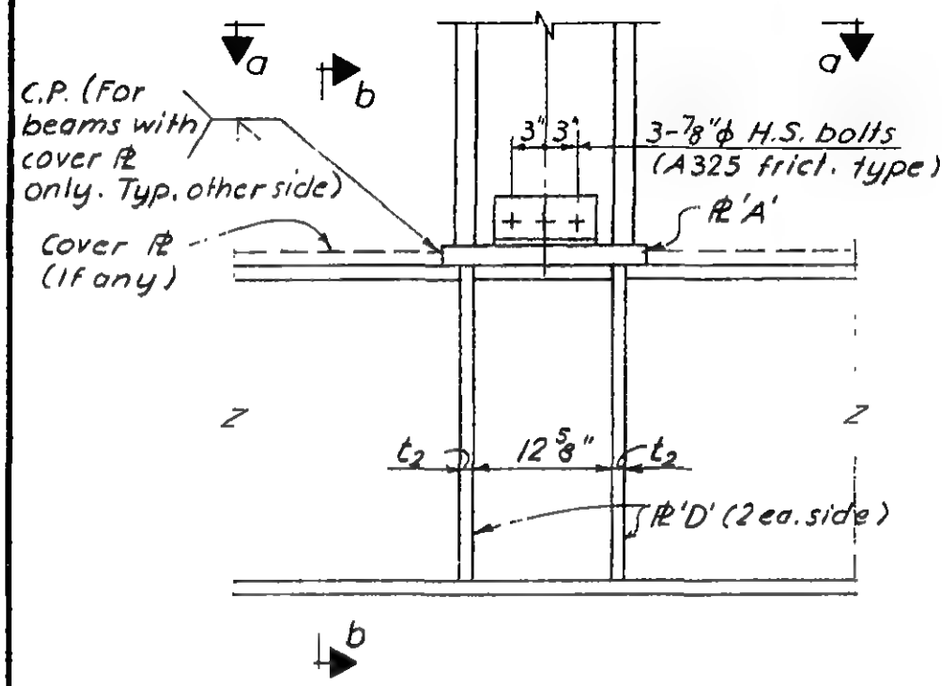

Type III

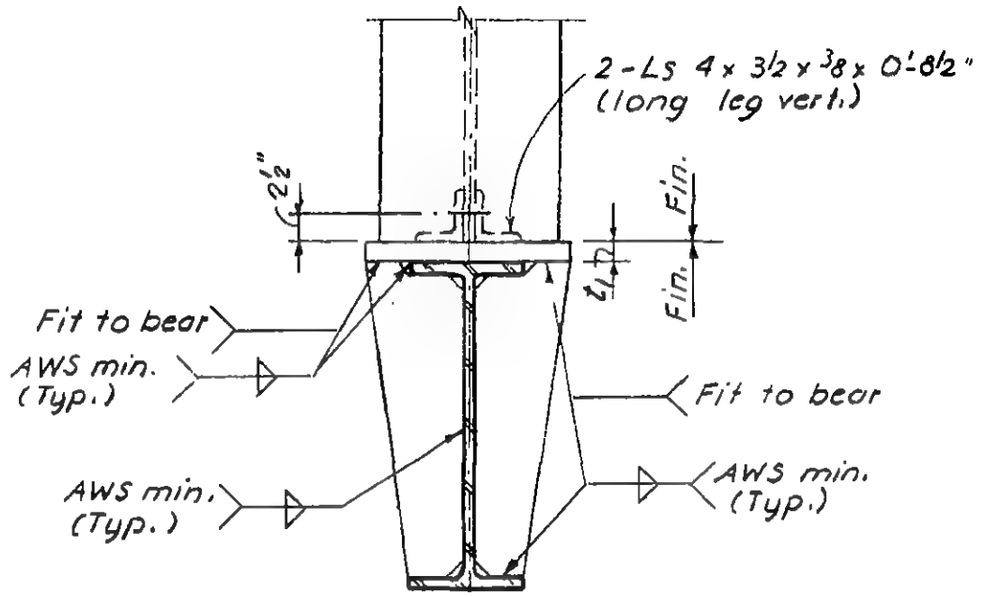

Section b-b

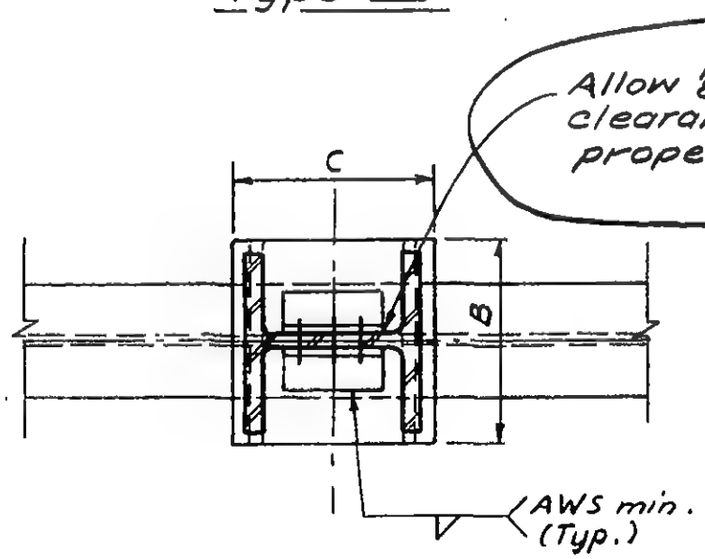

Section a-a

NOTES:
1. For columns with designation other than "J" or "K", fill Pls & bolts to be provided by others.

LESLIE E. ROBERTSON — REGISTERED PROFESSIONAL ENGINEER — No. 34960 — UNIVERSITY OF THE STATE OF NEW YORK

DESIGNED

DRAWN

REVIEWED

10-JK3-6

SKILLING, HELLE, CHRISTIANSEN, ROBERTSON — Structural & Civil Engineers

PROJECT THE WORLD TRADE CENTER | TITLE COLUMN BASE PLATE DETAIL AT EL. 310±0" | DATE 10-15-68

REVISIONS

11-5-68

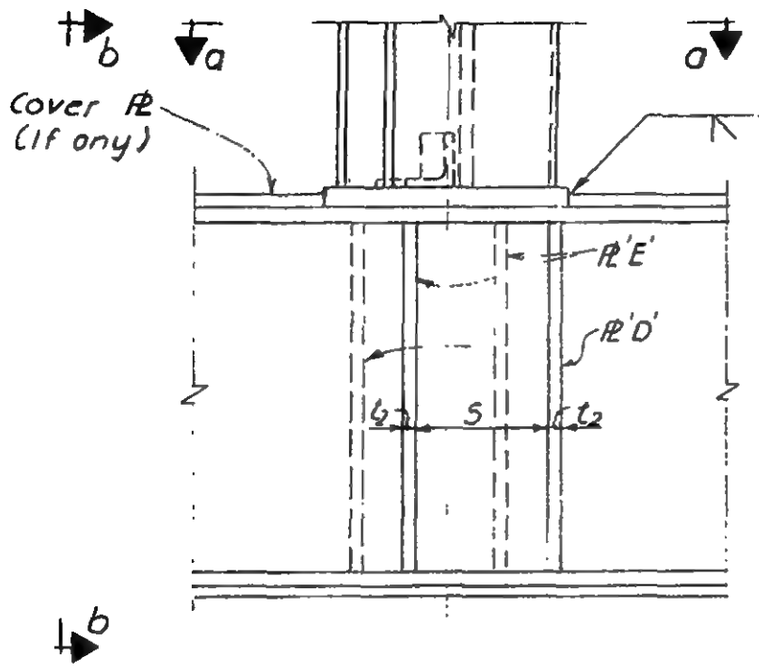

Type IV

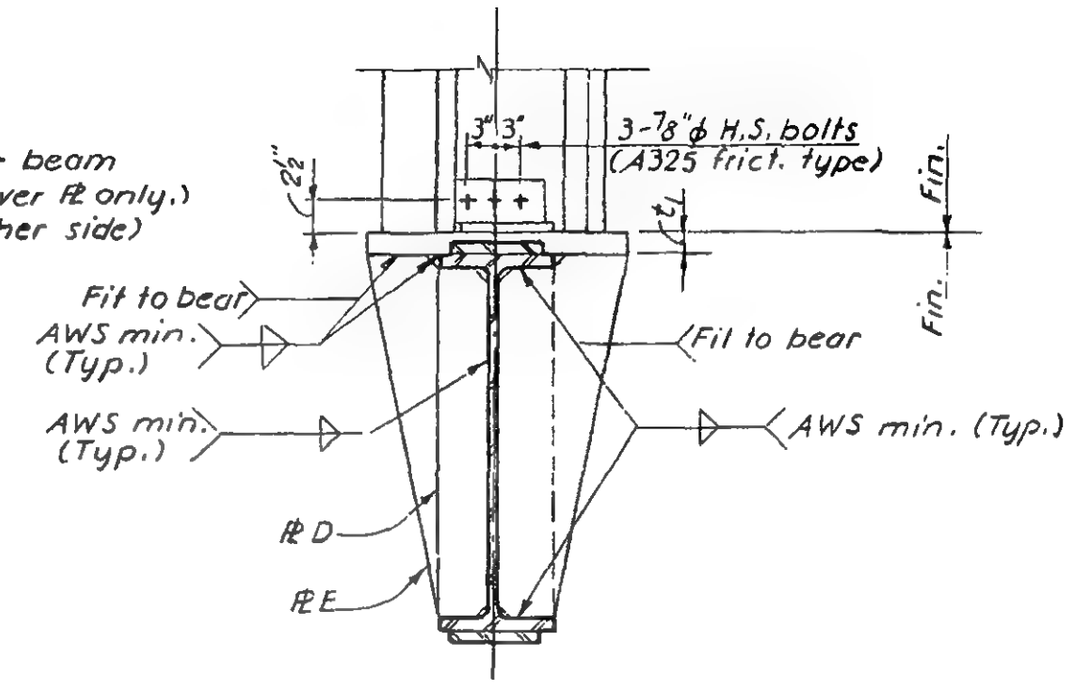

Section b-b

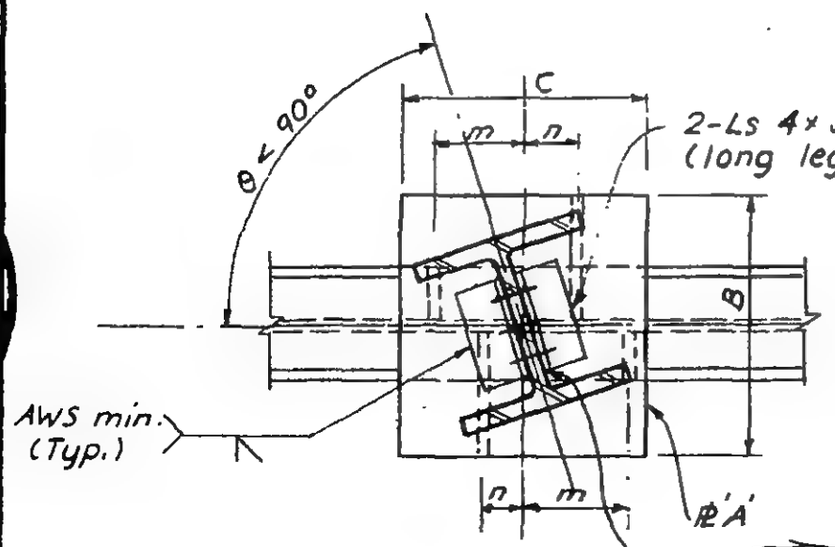

Section a-a

Allow ⅛" erection clearance and provide proper fill Pls (see note 1.)

NOTES:
1. For columns with designation other than "J" or "K", fill Pls & bolts to be provided by others.

LICENSED PROFESSIONAL ENGINEER — LESLIE E ROBERTSON — No. 34360 — UNIVERSITY OF THE STATE OF NEW YORK

DESIGNED

DRAWN

REVIEWED

10-JK3-7

SKILLING, HELLE, CHRISTIANSEN, ROBERTSON — Structural & Civil Engineers

PROJECT THE WORLD TRADE CENTER | TITLE COLUMN BASE PLATE DETAIL AT EL. 310'-0" | DATE 10-15-68

REVISIONS

11-5-68

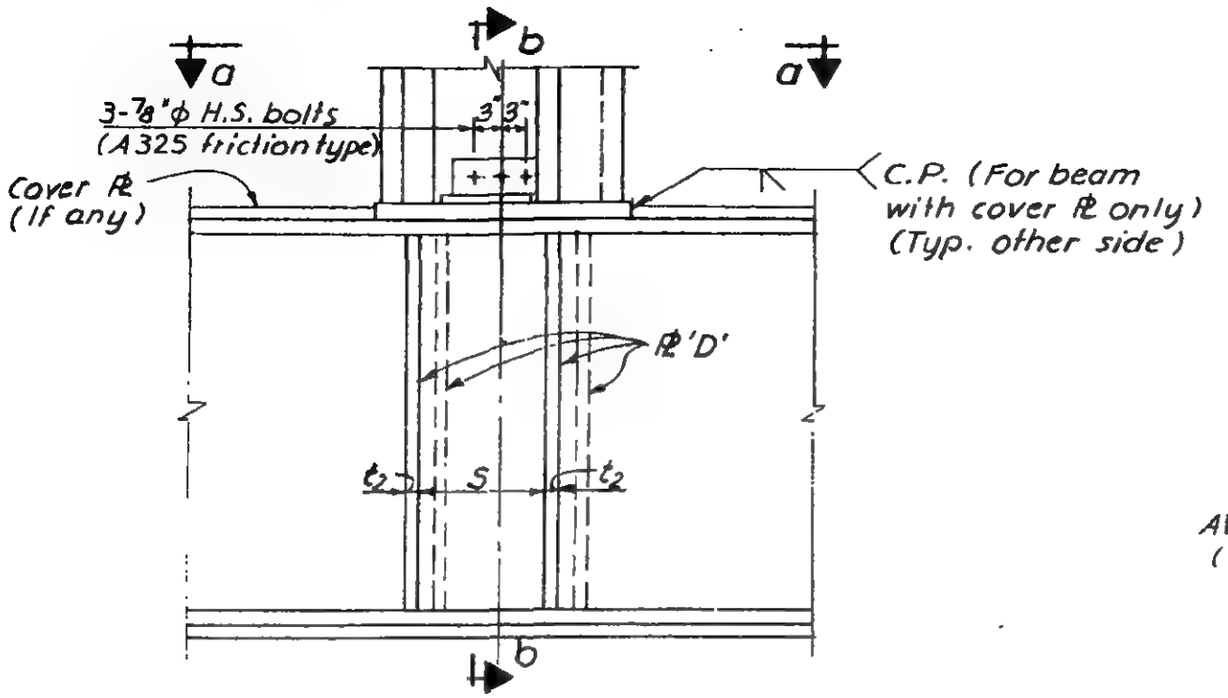

Type V

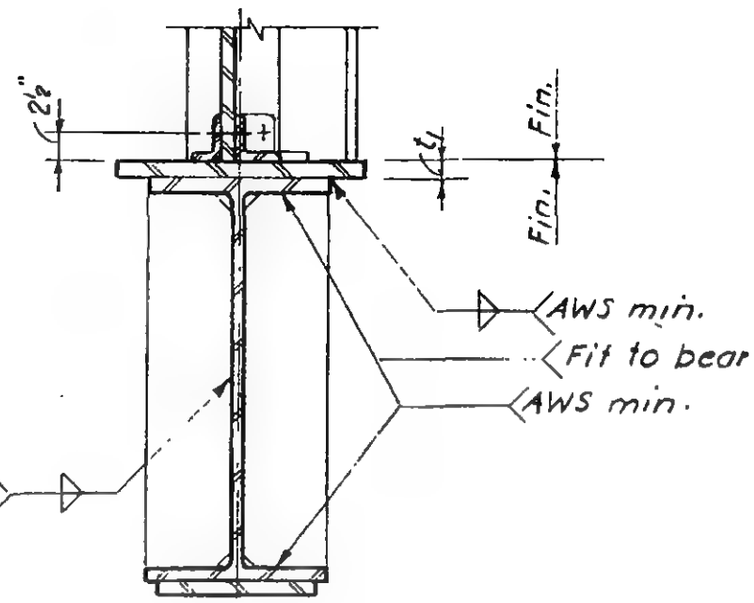

Section b-b

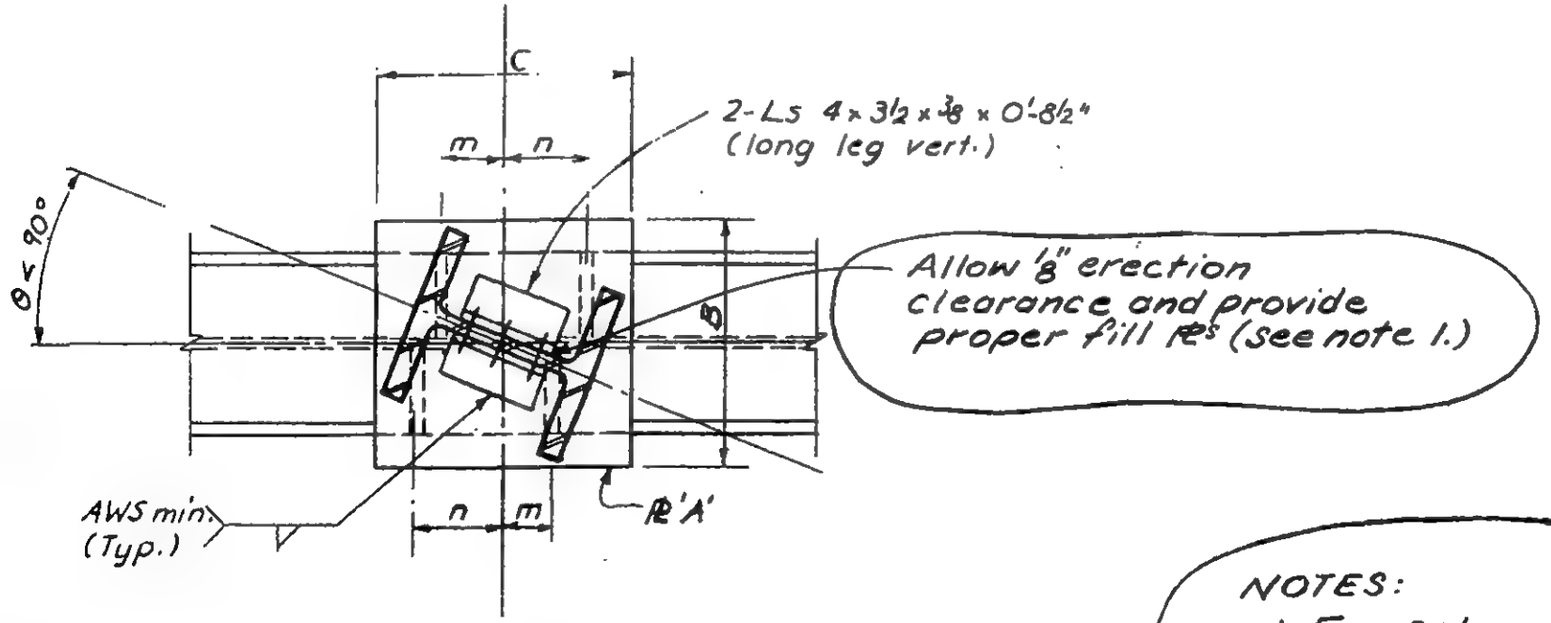

Section a-a

NOTES:

1. For columns with designation other than "J" or "K", fill Pls & bolts to be provided by others.

LICENSED PROFESSIONAL ENGINEER — LESLIE E. ROBERTSON — No. 34360 — UNIVERSITY OF THE STATE OF NEW YORK

DESIGNED

DRAWN

REVIEWED

10-JK3-8

SKILLING, HELLE, CHRISTIANSEN, ROBERTSON — Structural & Civil Engineers

PROJECT THE WORLD TRADE CENTER | TITLE COLUMN BASE PLATE DETAIL AT EL. 310'-0" | DATE 10-15-68

REVISIONS

11-5-68

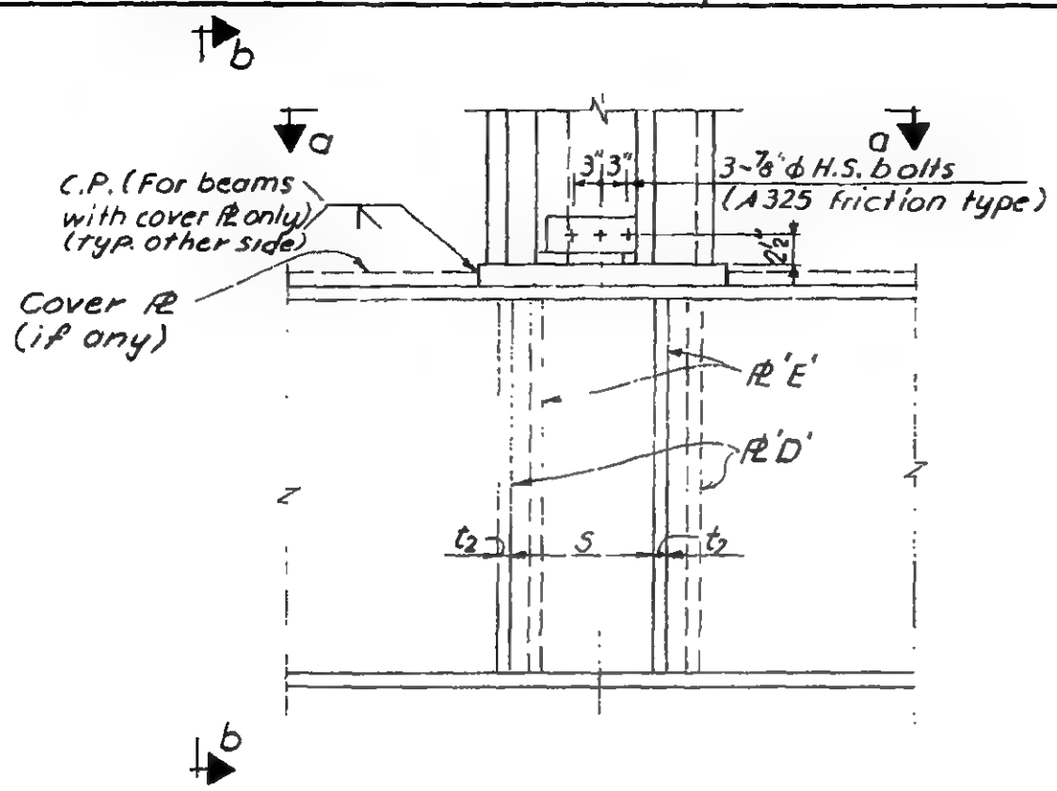

Type VI

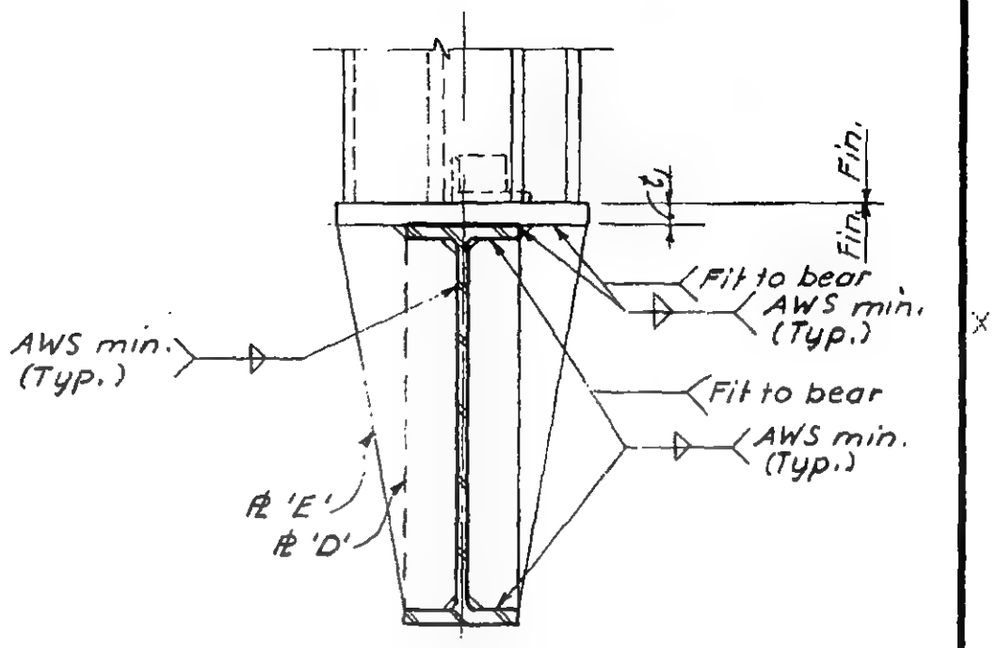

Section b-b

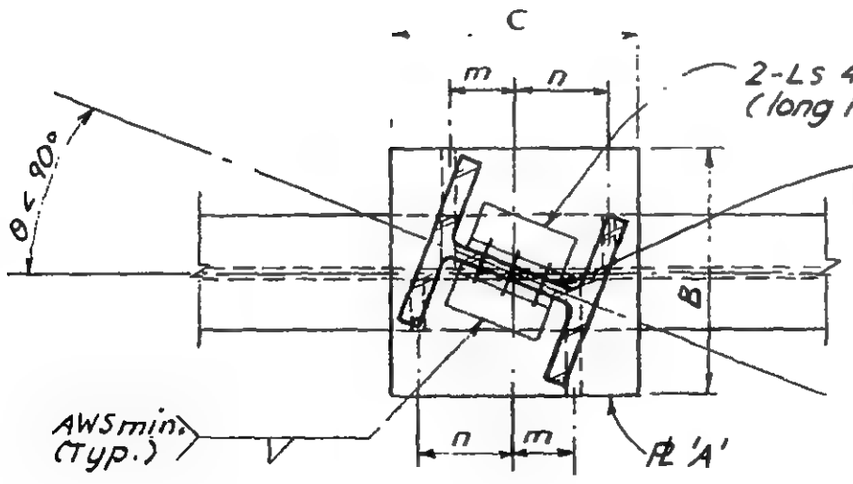

Section a-a

NOTES:

1. For columns with designation other than "J" or "K", fill Pls & bolts to be provided by others.

LICENSED PROFESSIONAL ENGINEER — LESLIE E. ROBERTSON — No. 34960 — UNIVERSITY OF THE STATE OF NEW YORK

DESIGNED

DRAWN

REVIEWED

10-JK3-9

SKILLING, HELLE, CHRISTIANSEN, ROBERTSON — Structural & Civil Engineers

PROJECT THE WORLD TRADE CENTER | TITLE COLUMN BASE PLATE DETAIL AT EL. 310'-0" | DATE 10-15-68

REVISIONS

11-5-68

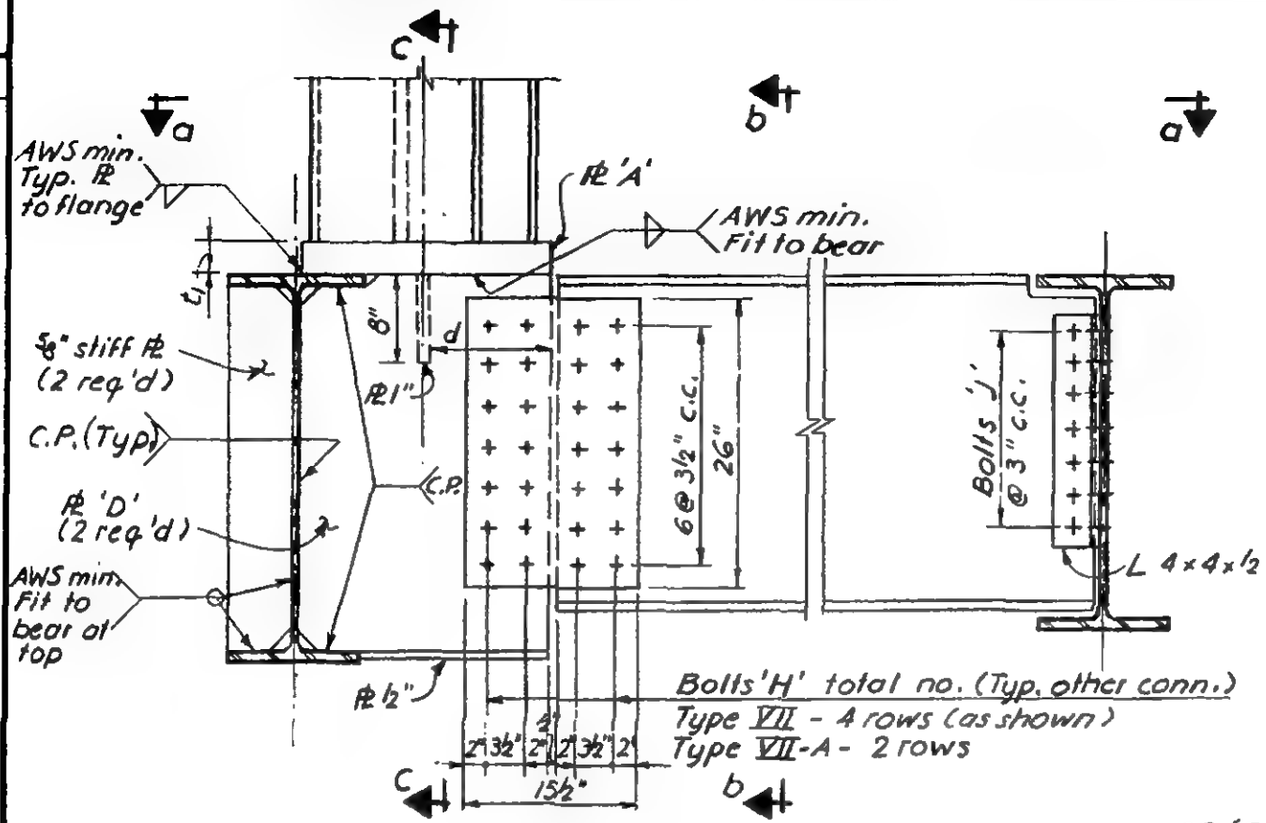

TYPE VII & VII-A

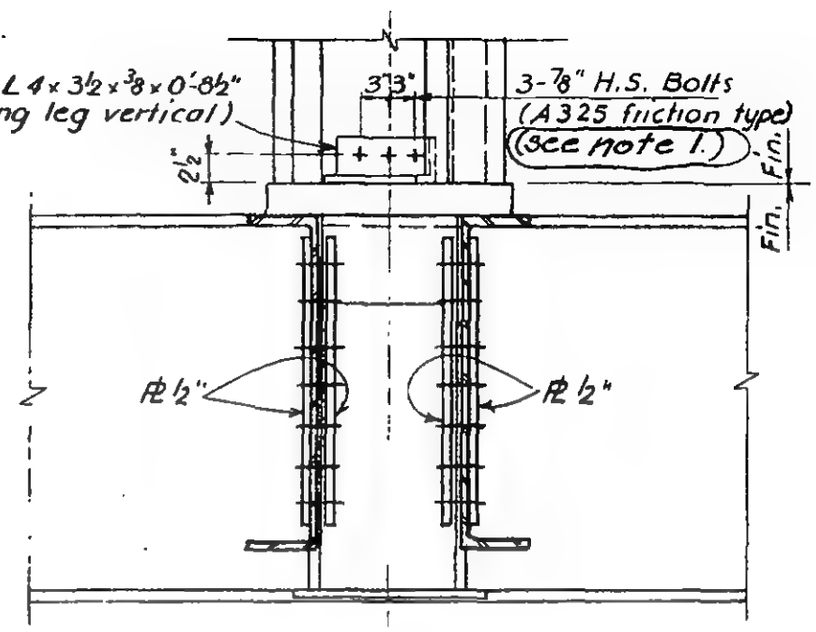

Section b-b

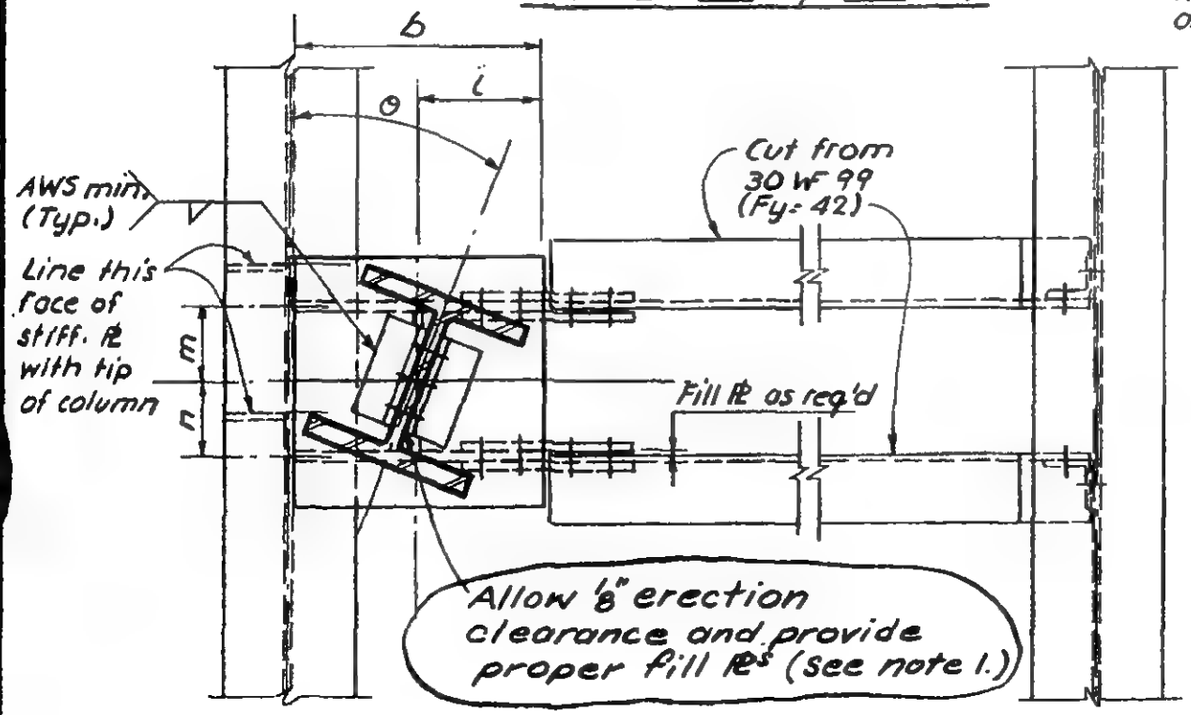

Section a-a

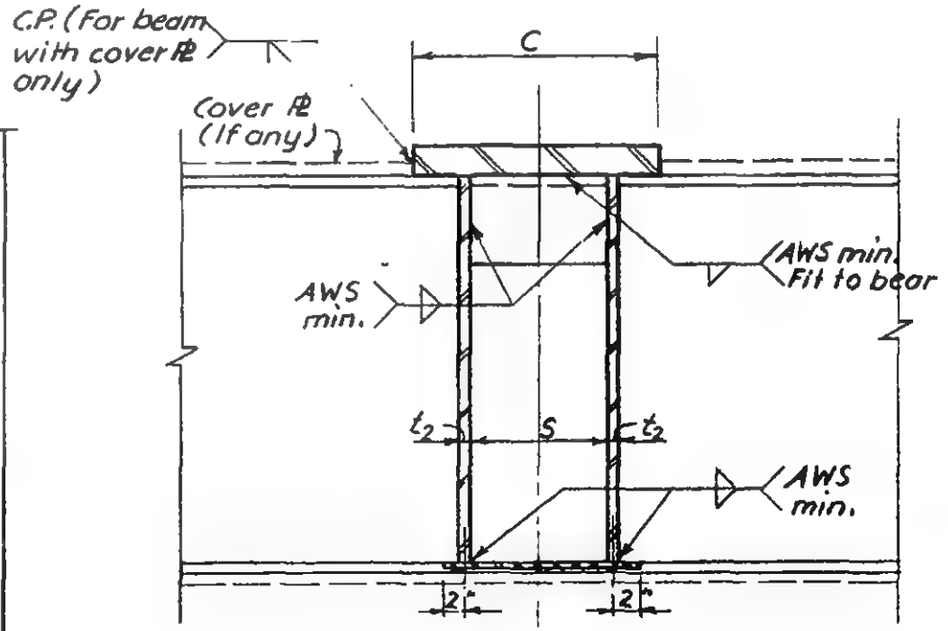

Section c-c

NOTES:
1. For columns with designation other than "J" or "K," these bolts & fill Pls to be provided by others.

10-JK3-10

DESIGNED

DRAWN

REVIEWED

SKILLING - HELLE - CHRISTIANSEN - ROBERTSON Structural & Civil Engineers

PROJECT THE WORLD TRADE CENTER | TITLE TYPICAL COLUMN SHEAR-HEAD DETAIL AT EL. 264' | DATE 10-20-67

REVISIONS

11-8-67
11-24-67
2-16-68
6-7-68
6-28-68
1-20-69

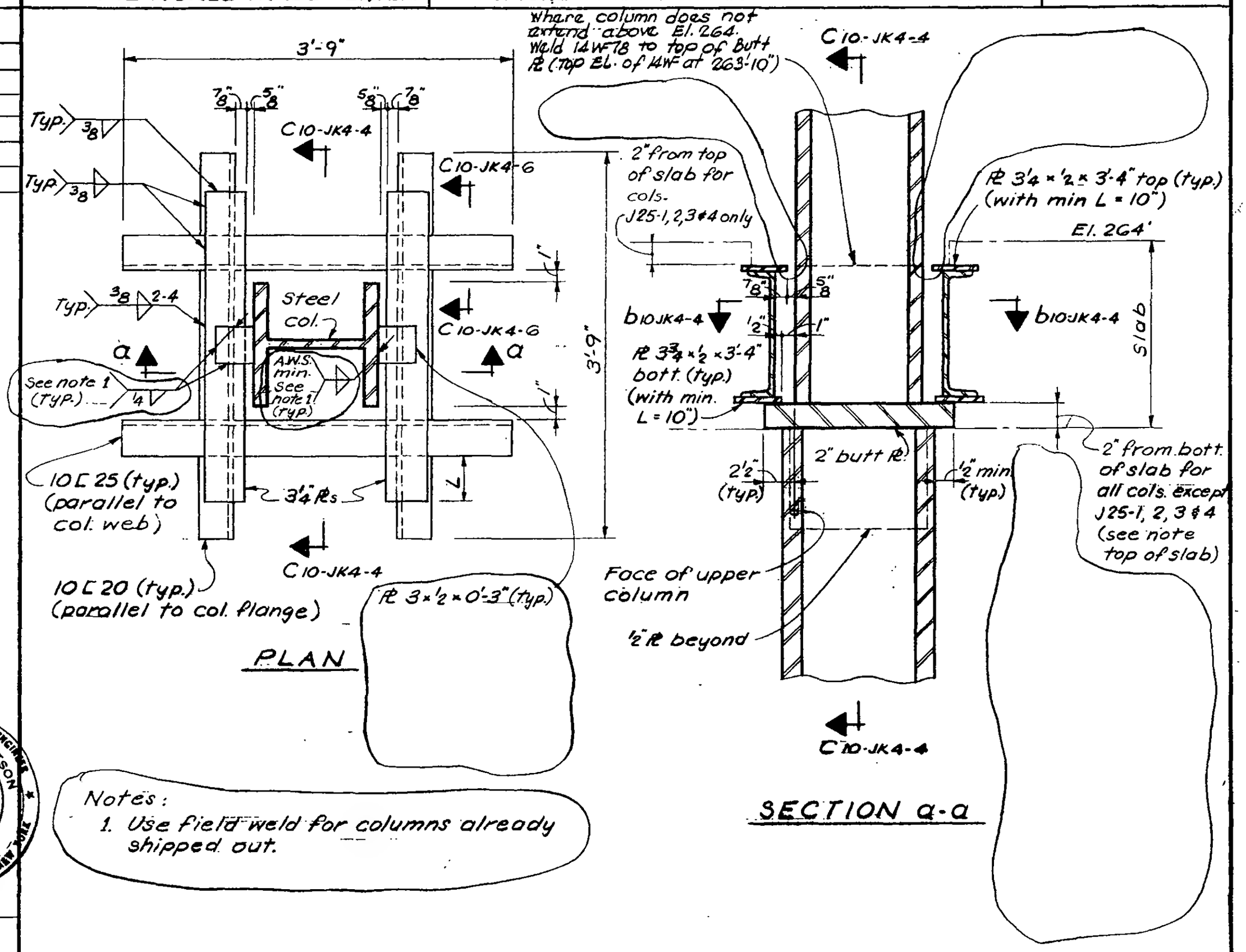

Notes:
1. Use field weld for columns already shipped out.

LICENSED PROFESSIONAL ENGINEER LESLIE E. ROBERTSON No. 34360 UNIVERSITY OF THE STATE OF NEW YORK

DRAWN S.C.

REVIEWED E.L.

10-JK4-3

SKILLING - HELLE - CHRISTIANSEN - ROBERTSON Structural & Civil Engineers

PROJECT THE WORLD TRADE CENTER | TITLE TYPICAL COLUMN SHEAR-HEAD DETAIL AT EL. 264' | DATE 10-20-67

REVISIONS
11-24-67
1-20-69

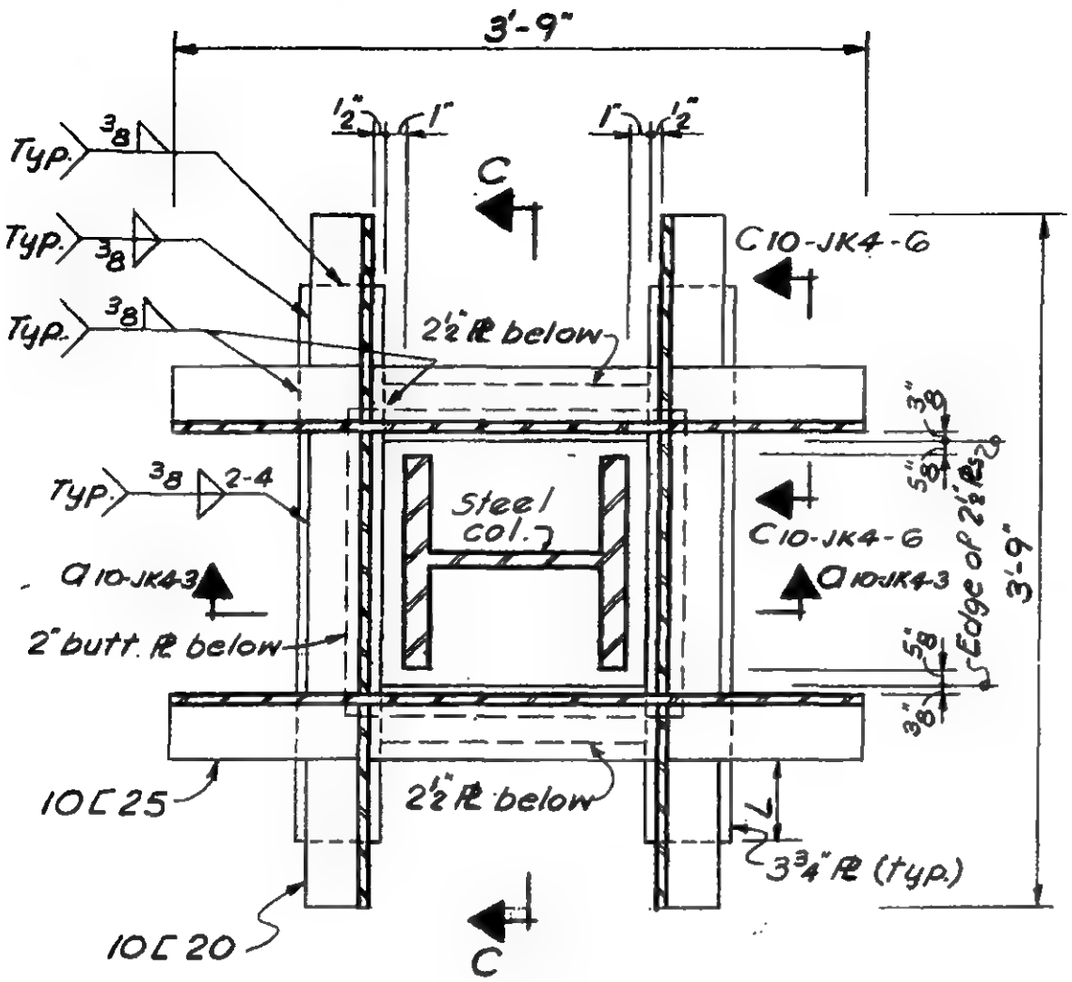

SECTION b-b

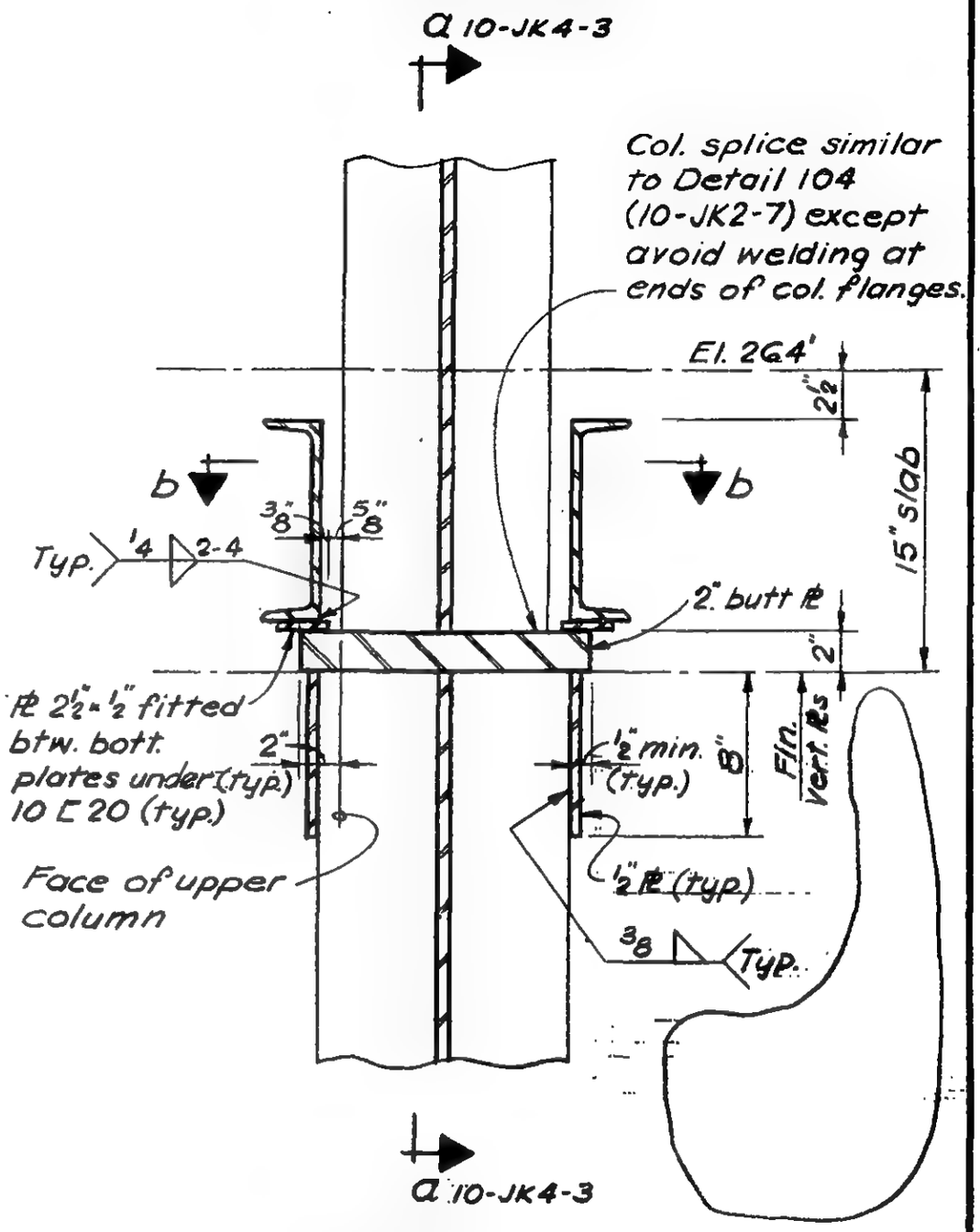

SECTION C-C

LICENSED PROFESSIONAL ENGINEER
LESLIE E. ROBERTSON
No. 34980
UNIVERSITY OF THE STATE OF NEW YORK

DRAWN
S.C.

REVIEWED
E.L.

10-JK4-4

SKILLING - HELLE - CHRISTIANSEN - ROBERTSON Structural & Civil Engineers

PROJECT THE WORLD TRADE CENTER | TITLE COLUMN SPLICE DETAIL | DATE 6-28-68

REVISIONS
9-4-68

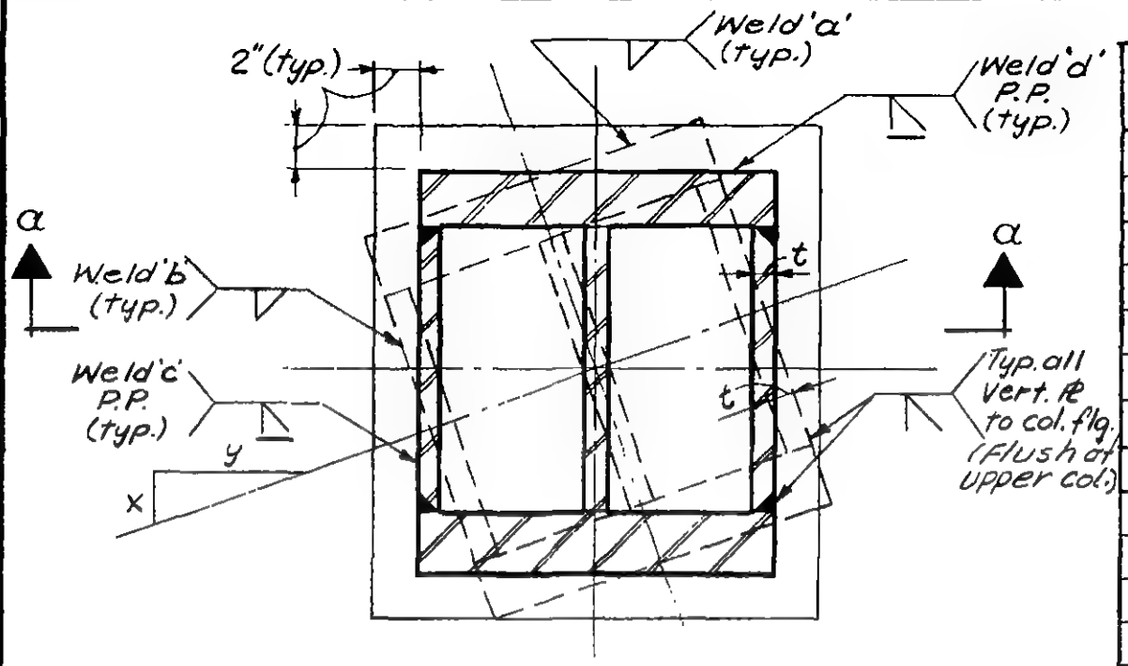

Section b-b

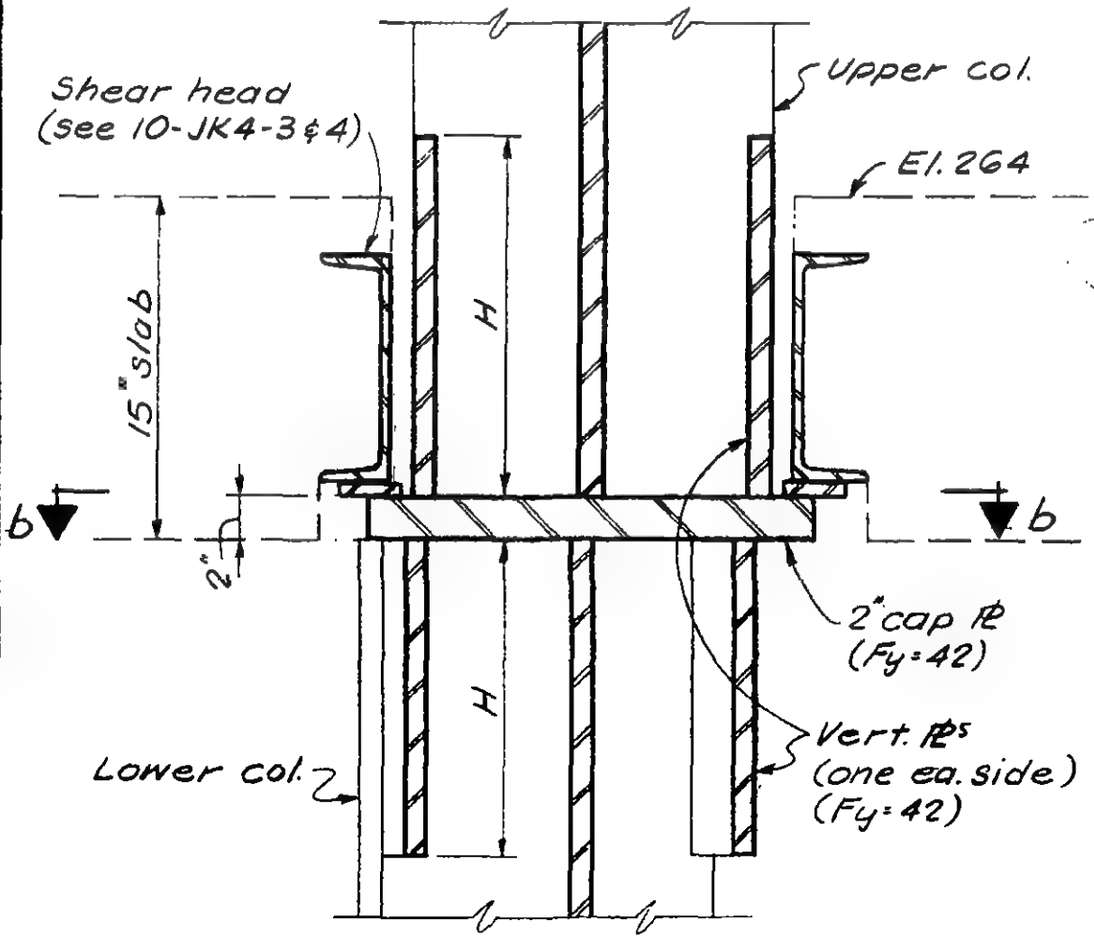

Section a-a

COLUMN No.	SIZE	X	y	VERT. Pls t	VERT. Pls H	WELDS a	WELDS b	WELDS c	WELDS d
J5-15	14 WF 158	1.0	3.0	1"	0'-10"	3/8"	3/8"	1/2"	1/2"
J5-56	14 WF 455	1.0	3.0	2"	1'-2"	1/2	3/8	5/8	13/16
J6-15	14 WF 136	1.0	3.0	1"	0'-10"	3/8	3/8	1/2	1/2
J72-2	14 WF 665	19.03	57.5	2 1/4"	1'-4"	1/2	3/8	5/8	1
J73-1	14 WF 455	19.03	57.5	2"	1'-0"	1/2	3/8	5/8	13/16
J73-2	14 WF 426	19.03	57.5	1 3/4"	0'-10"	1/2	3/8	5/8	13/16
K61-6	14 WF 228	20.98	131.21	1"	0'-10"	3/8"	3/8"	1/2"	1/2"

LICENSED PROFESSIONAL ENGINEER
LESLIE E. ROBERTSON
No. 34360
UNIVERSITY OF THE STATE OF NEW YORK

10-JK4-4B

SKILLING - HELLE - CHRISTIANSEN - ROBERTSON Structural & Civil Engineers

PROJECT THE WORLD TRADE CENTER | TITLE COLUMN SHEAR HEAD DETAIL - TYPE V, W, X | DATE 11-24-67

REVISIONS
- 1-5-68
- 1-29-68
- 6-28-68
- 12-3-68

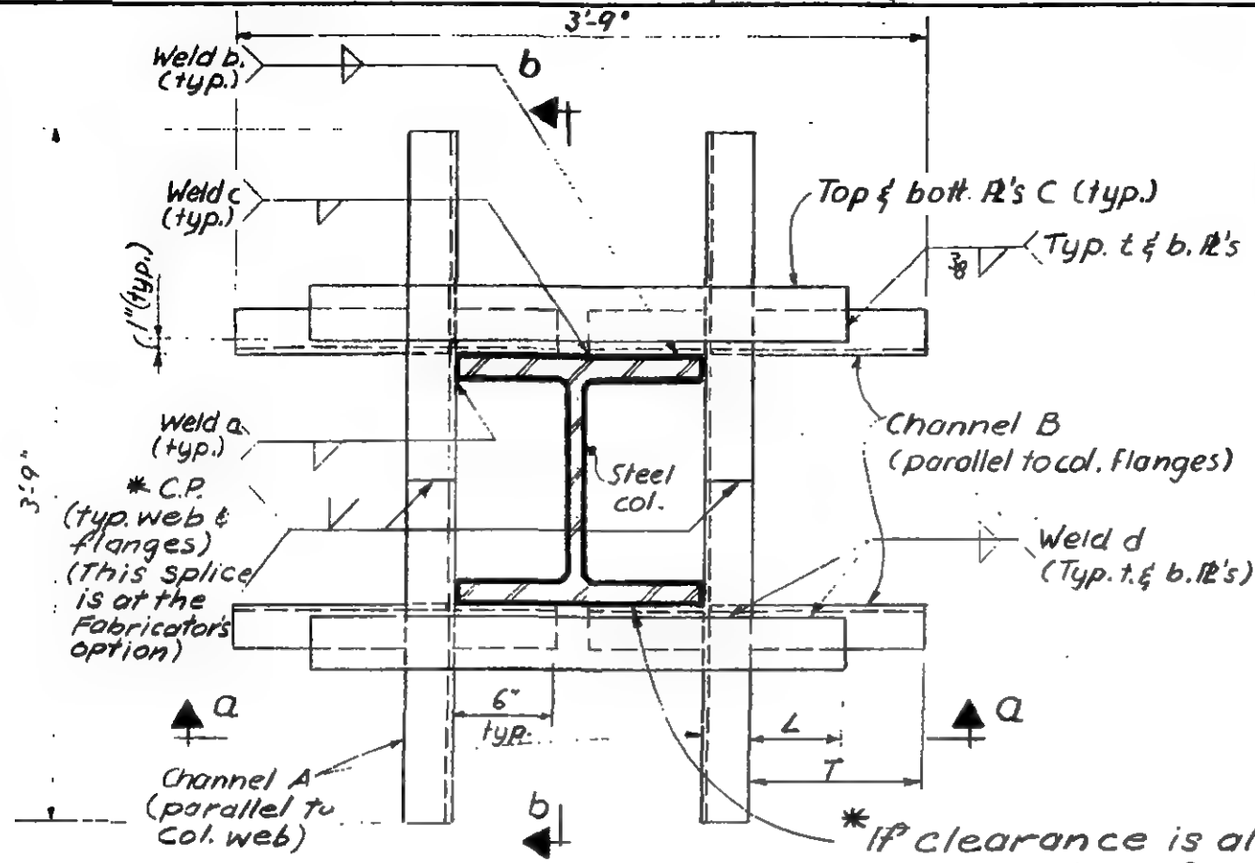

PLAN

SCHEDULE (All material with Fy = 50 ksi - E70 welding)		SHEAR HEAD TYPE		
		V	W	X
Member Sizes	Channel A	12 x 3½ C 32.9	12 x 3½ C 32.9	10 x 4 C 33.6
	Channel B	12 x 3½ C 37	12 x 4 C 45	10 x 4 C 33.6
	ℓ's C	3½ x ½ x 3'-2"	3½ x ½ x 3'-4"	3½ x ½ x 3'-4"
	**min. L	8"	10"	10"
Weld Sizes	a	½	½	½
	b	½	5/8	½
	c	½	5/8	½
	d	3/8	3/8	3/8

** For large columns where L ≥ T, reduce L so that T - L = ½".

* If clearance is allowed between col. & C's, size of weld a, b & c has to be increased by the dimension of this gap. (max. clearance = ⅛")

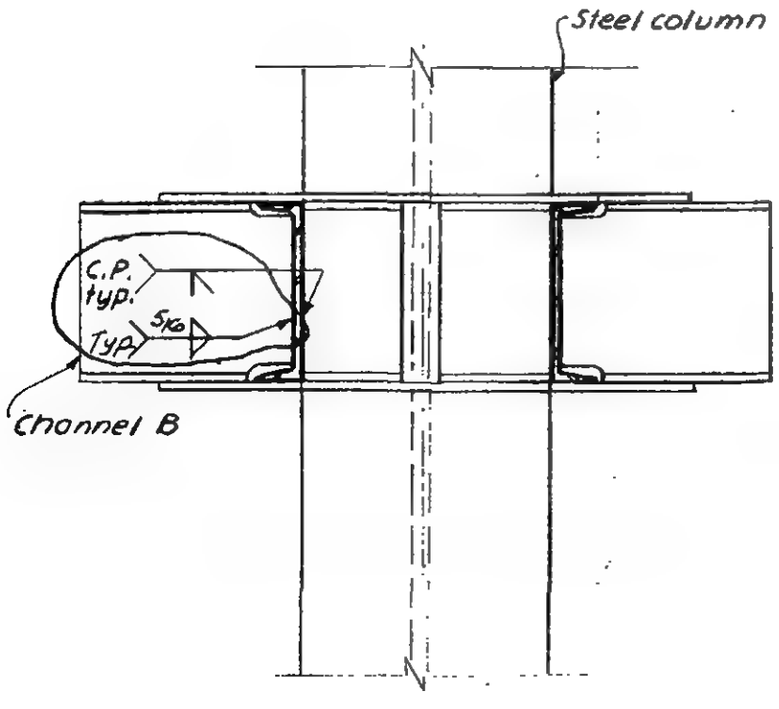

Section a-a

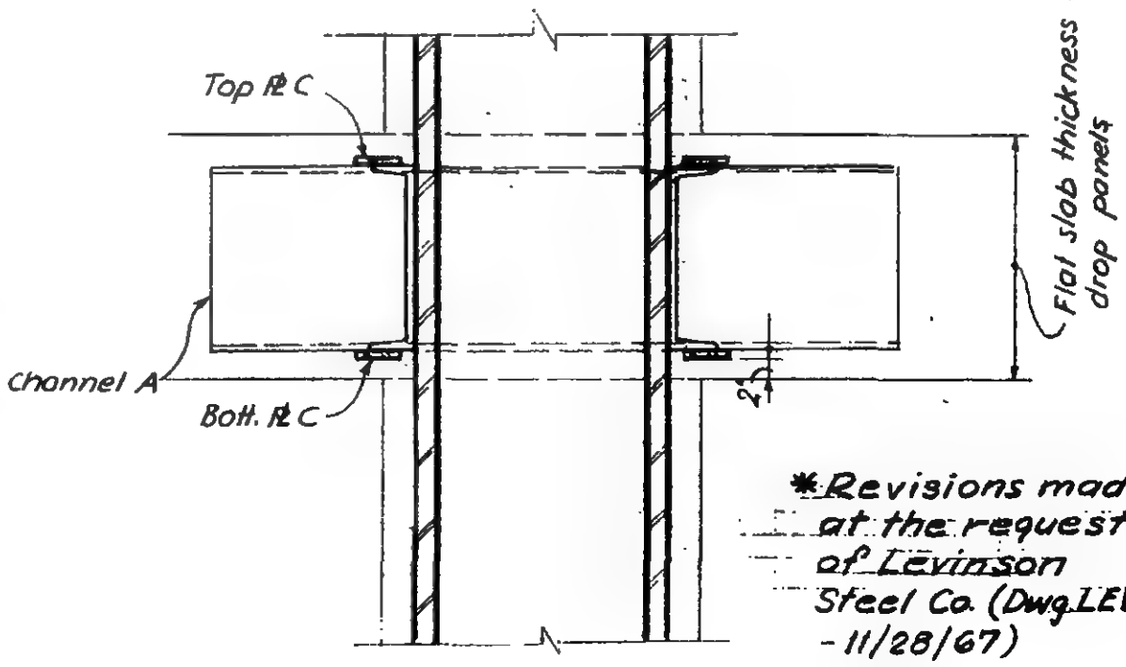

Section b-b

*Revisions made at the request of Levinson Steel Co. (Dwg. LEV. 9 - 11/28/67)

LICENSED PROFESSIONAL ENGINEER
LESLIE E. ROBERTSON
No. 34960
UNIVERSITY OF THE STATE OF NEW YORK

10-JK4-5

WORTHINGTON. SKILLING. HELLE & JACKSON — Civil & Structural Engineers

PROJECT: THE WORLD TRADE CENTER | TITLE: COLUMN SHEAR - HEAD DETAILS - TYPE Y | DATE: 11-24-67

REVISIONS
1-5-68
6-28-68
12-3-68

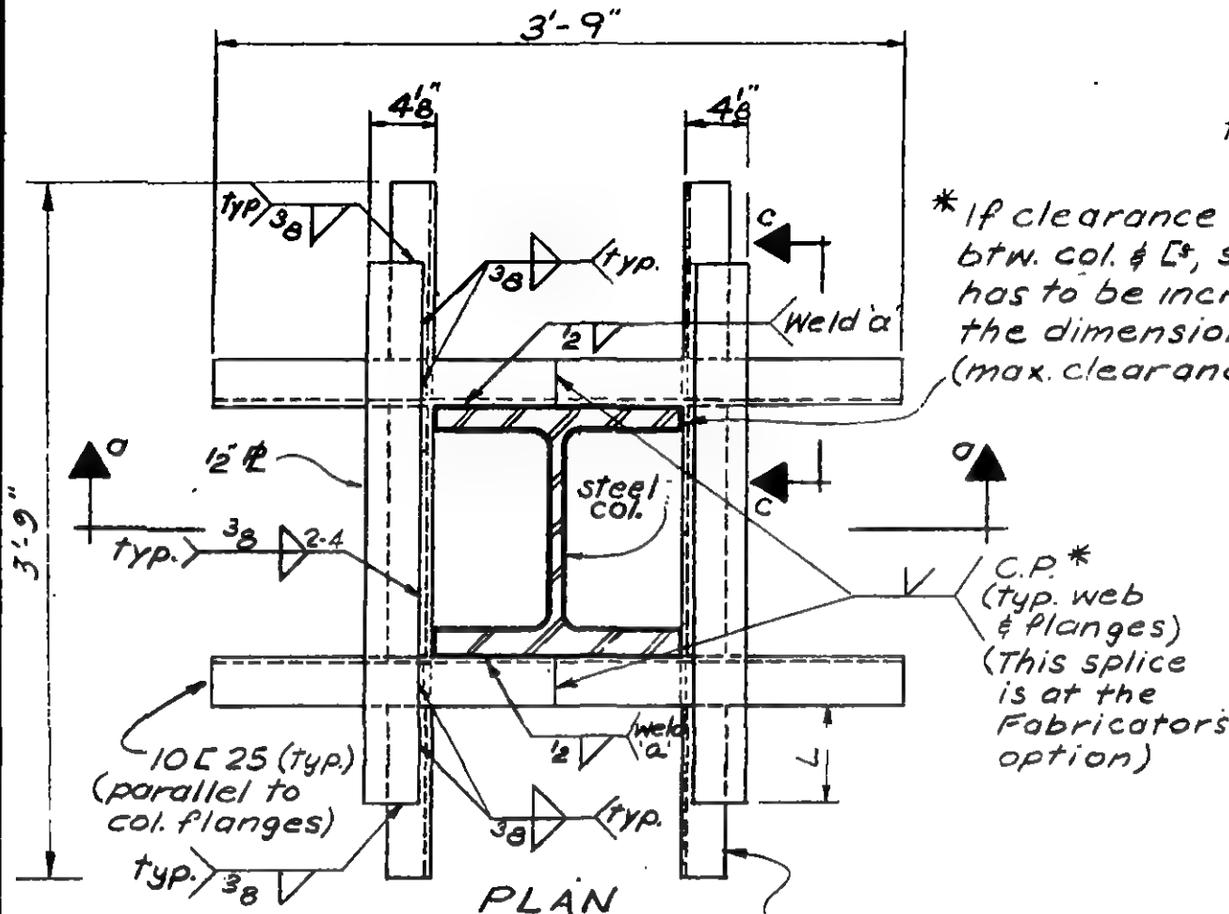

PLAN

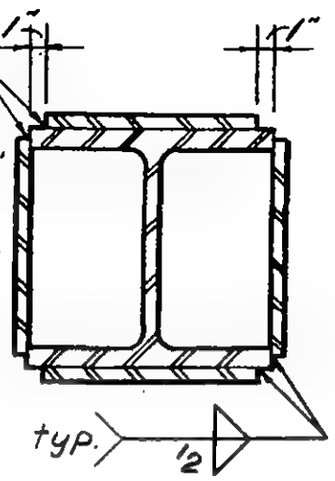

* If clearance is allowed btw. col. & C's, size of weld 'a' has to be increased by the dimension of this gap. (max. clearance = ⅛")

SECTION b-b

Where no column above this floor, top of lower col. shall be 1" below top of C, and weld 'a' shall be on the inside face of C

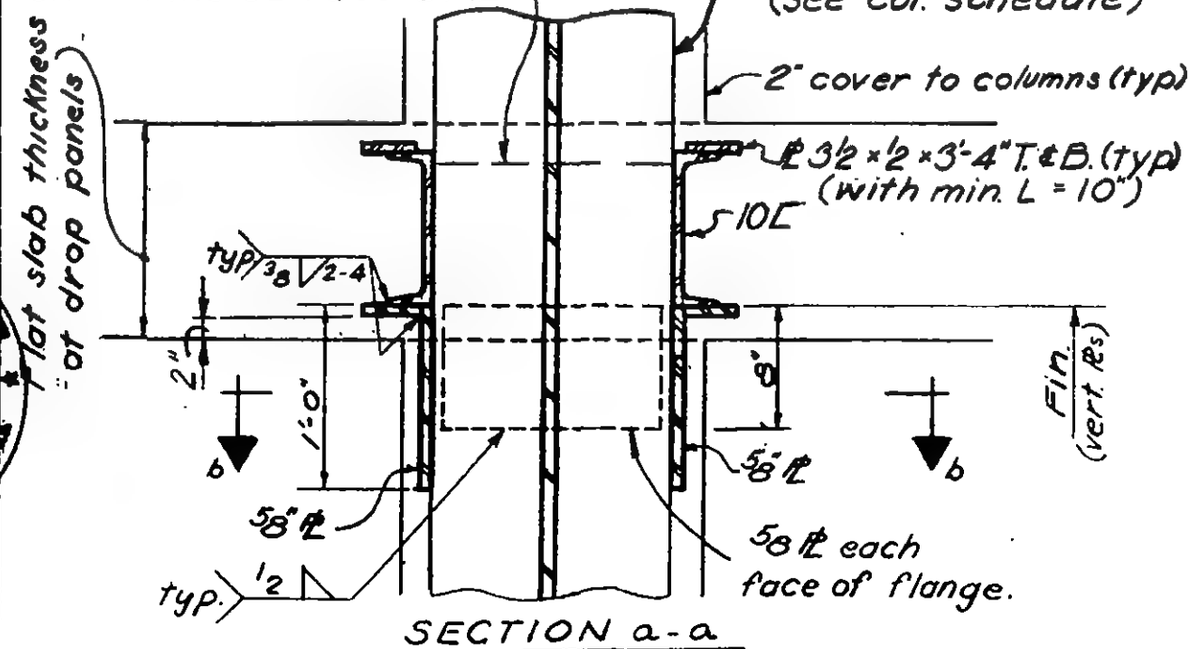

SECTION a-a

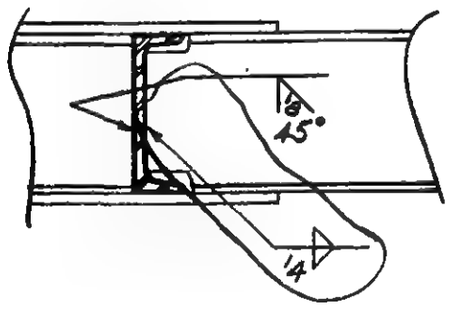

SECTION C-C

* Revisions made at the request of Levinson Steel Co. (Dwg. LEV. #9 - 11/28/67)

LICENSED PROFESSIONAL ENGINEER LESLIE E. ROBERTSON No. 34360 UNIVERSITY OF THE STATE OF NEW YORK

10 - JK4 - 6

SKILLING - HELLE - CHRISTIANSEN - ROBERTSON Structural & Civil Engineers

PROJECT THE WORLD TRADE CENTER | TITLE SHEAR HEAD DETAIL | DATE 4-5-68

REVISIONS
12-3-68

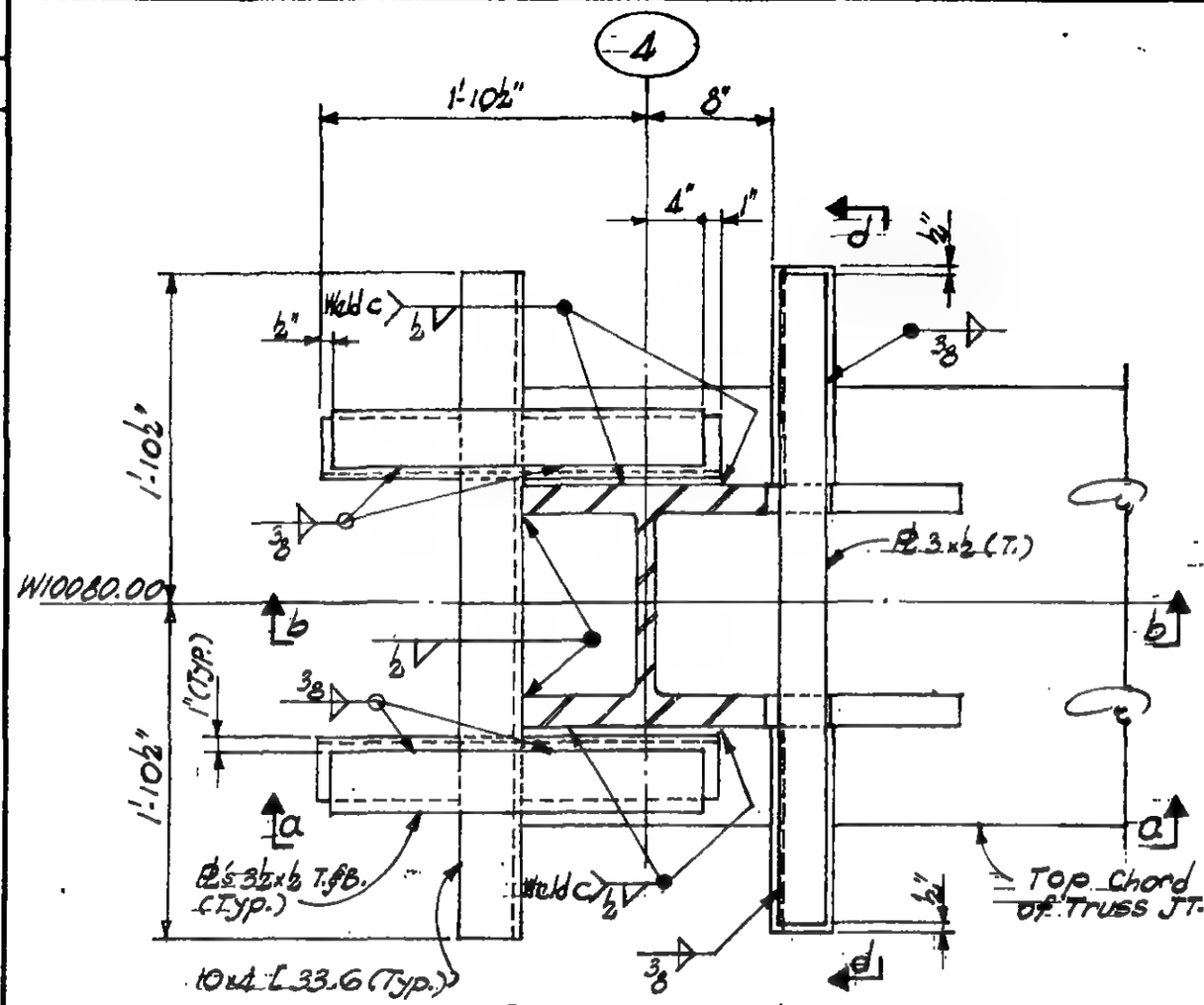

PLAN

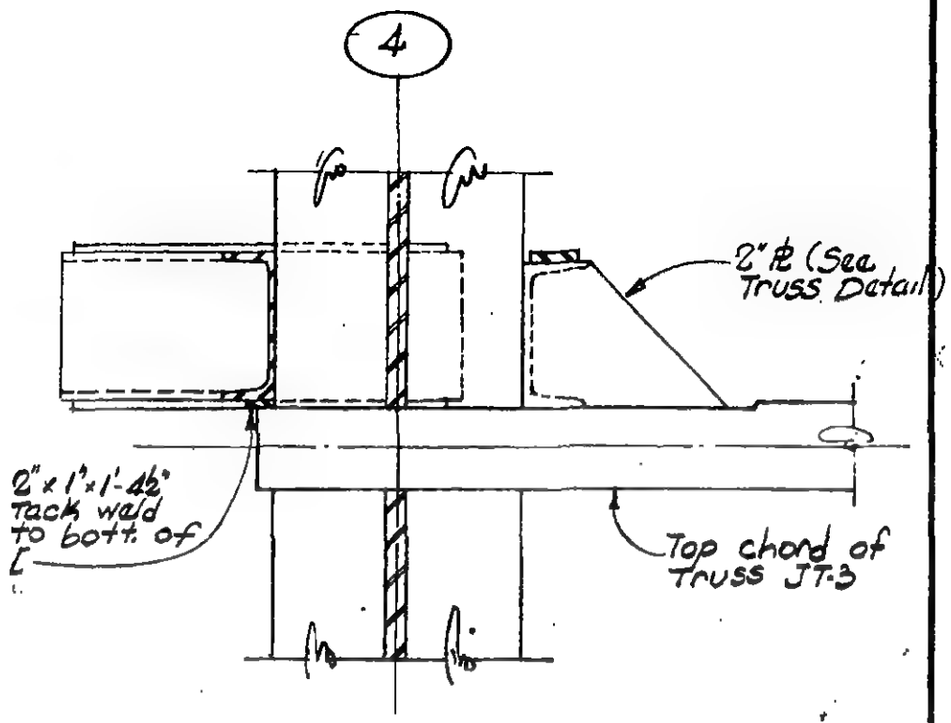

Section b-b

Note:
1. If clearance is allowed between column & PL, size of weld c has to be increased by the dimension of this gap (max. clearance = ⅛")
2. All material to be Fy = 50 ksi

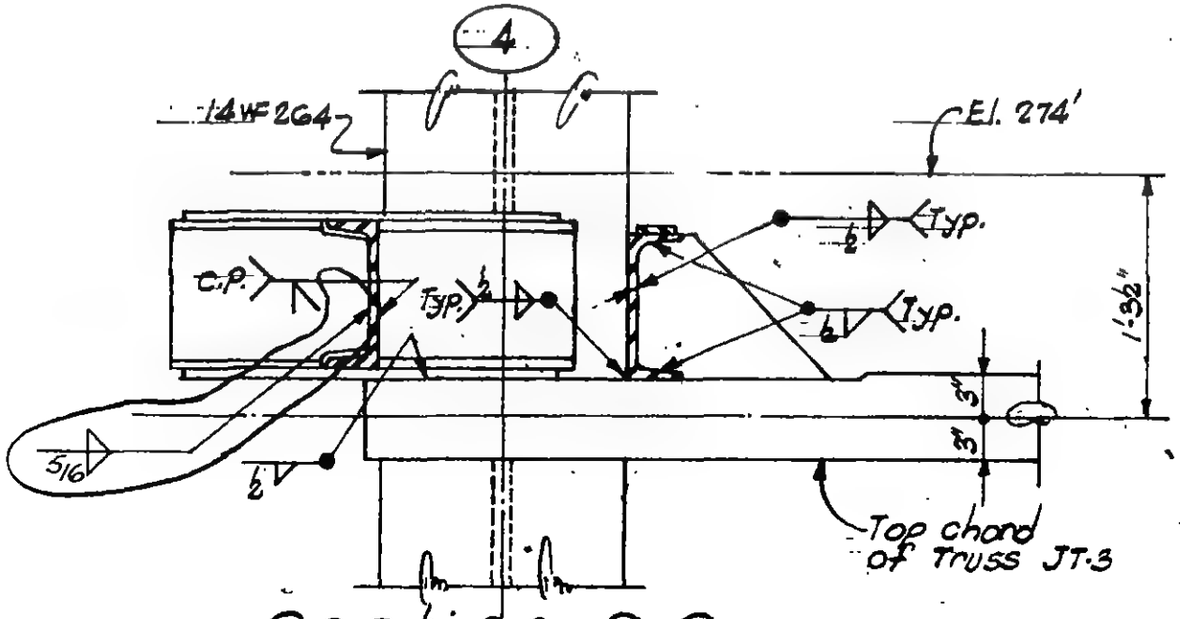

Section a-a

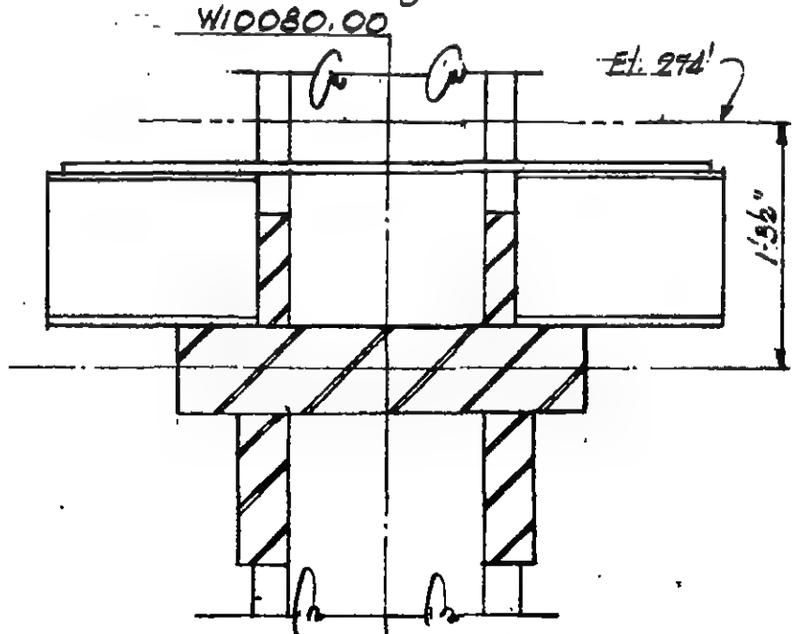

Section d-d

10-JK4-7

LICENSED PROFESSIONAL ENGINEER
LESLIE E. ROBERTSON
No. 84360
STATE OF NEW YORK

SKILLING - HELLE - CHRISTIANSEN - ROBERTSON Structural & Civil Engineers

PROJECT THE WORLD TRADE CENTER | TITLE SHEAR HEAD DETAIL | DATE 4-5-68

EVISIONS

6-28-68

12-3-68

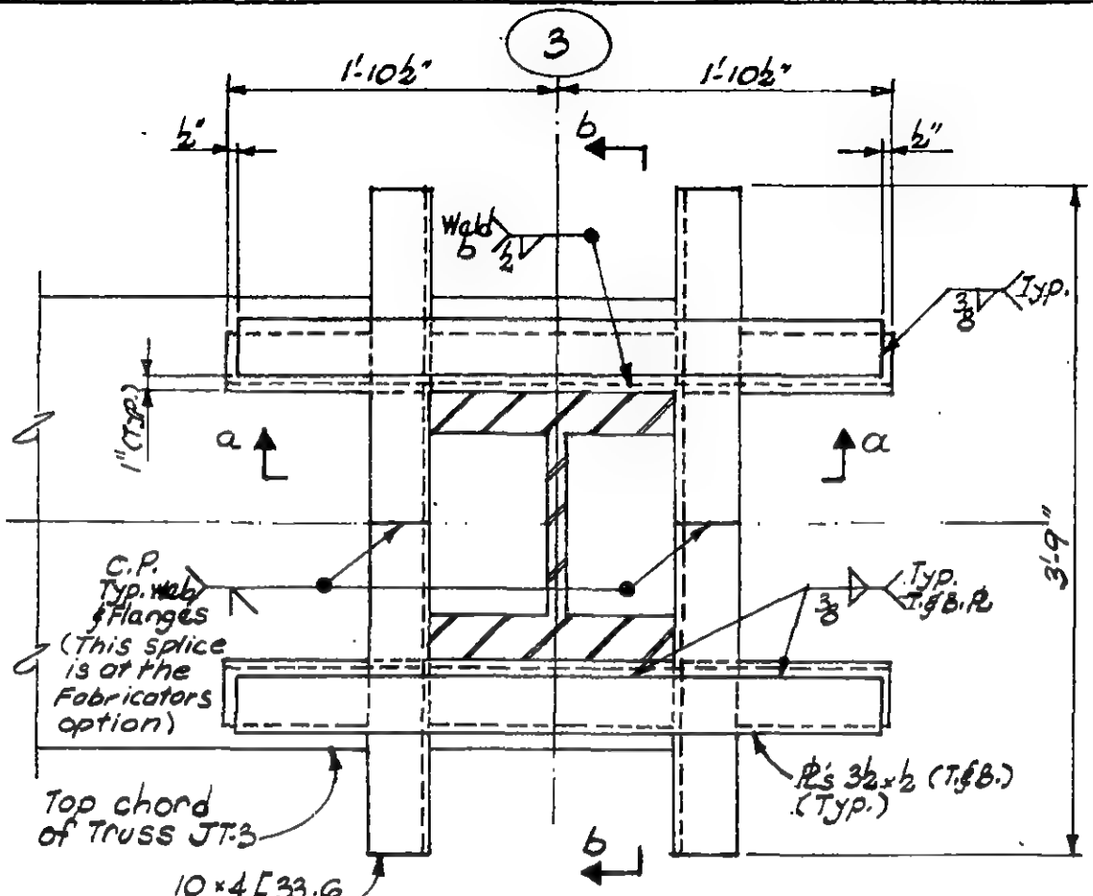

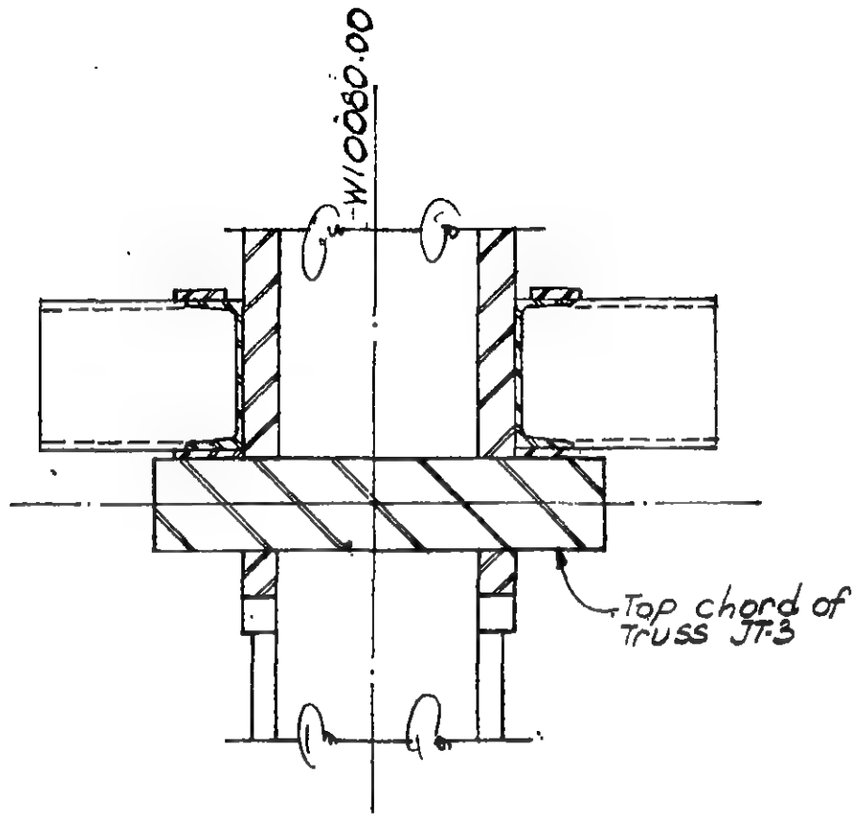

Section b-b

Note:

1. If clearance is allowed between column & channels, size of weld b has to be increased by the dimension of this gap. (max. clearance = ⅛")
2. All material to be Fy = 50 ksi.

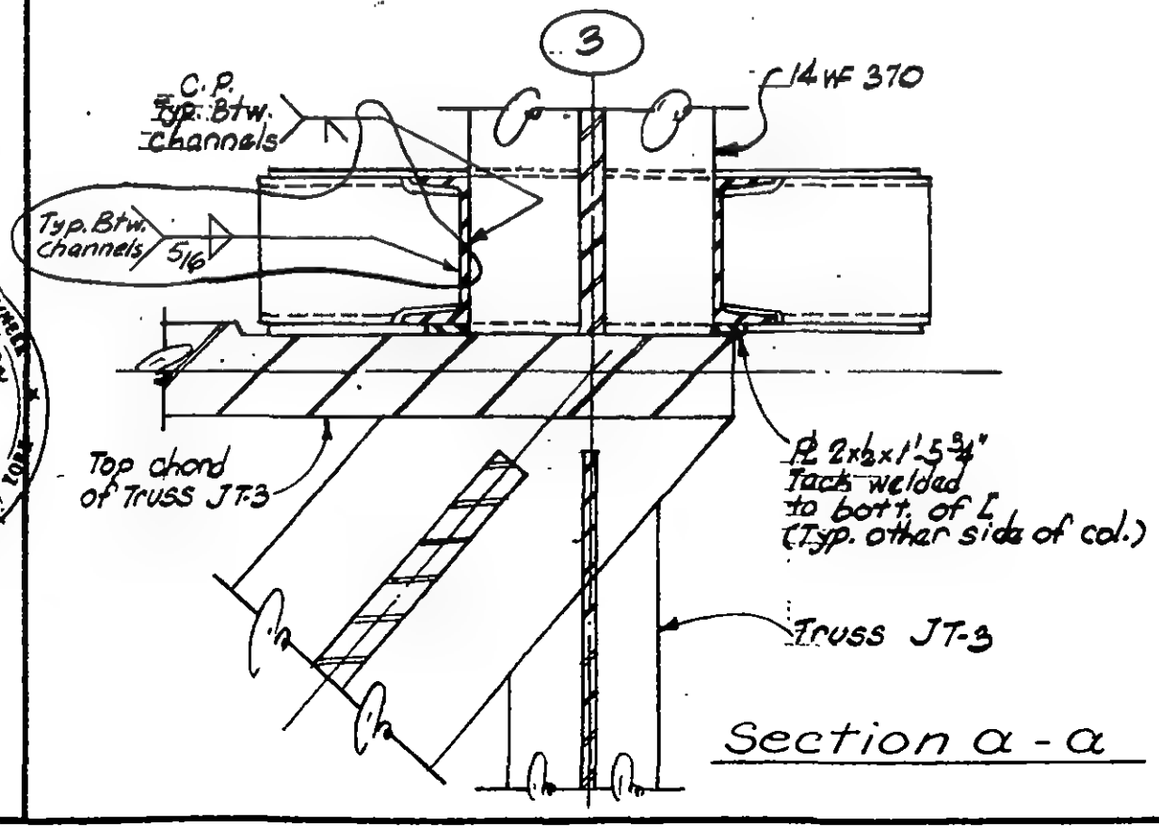

Section a - a

LICENSED PROFESSIONAL ENGINEER LESLIE E. ROBERTSON No. 34360 STATE OF NEW YORK

10-JK4-8

SKILLING - HELLE - CHRISTIANSEN - ROBERTSON Structural & Civil Engineers

PROJECT THE WORLD TRADE CENTER | TITLE SHEAR HEAD DETAIL | DATE 4-5-68

REVISIONS
6-28-68
12-3-68
1-20-69

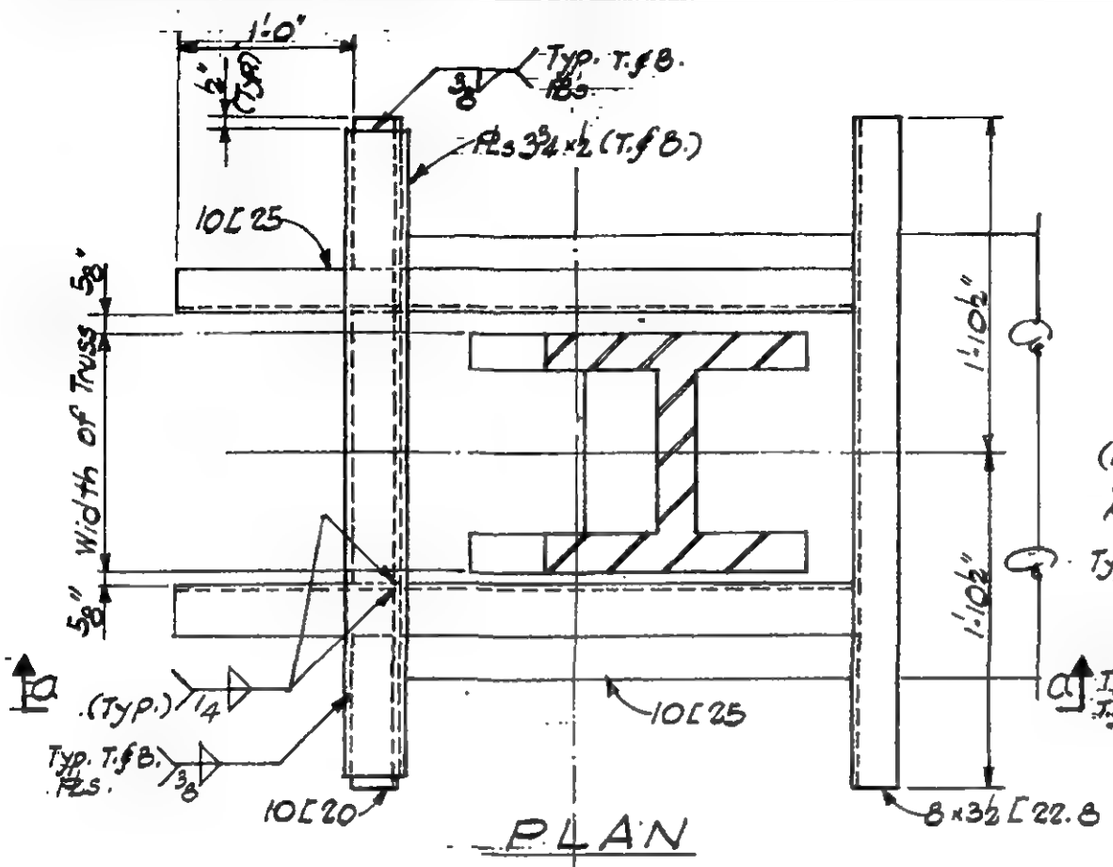

PLAN

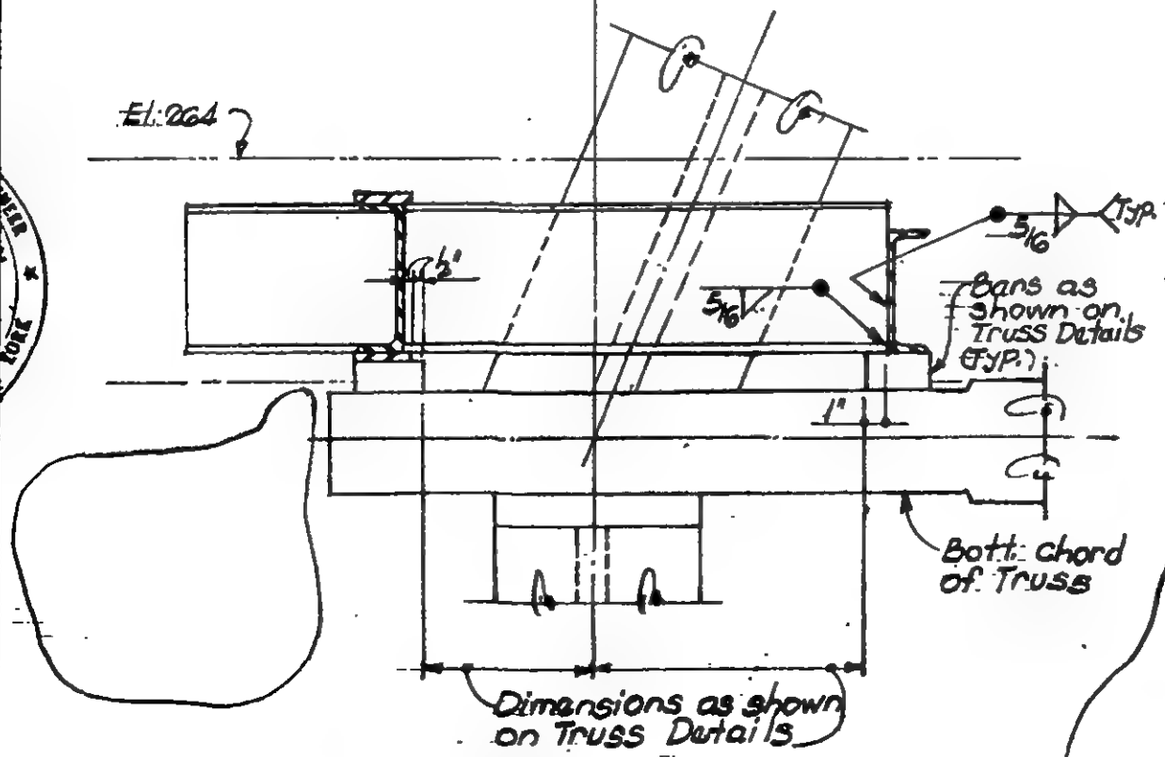

Section a-a
DETAIL-1
(All material Fy=50 ksi)

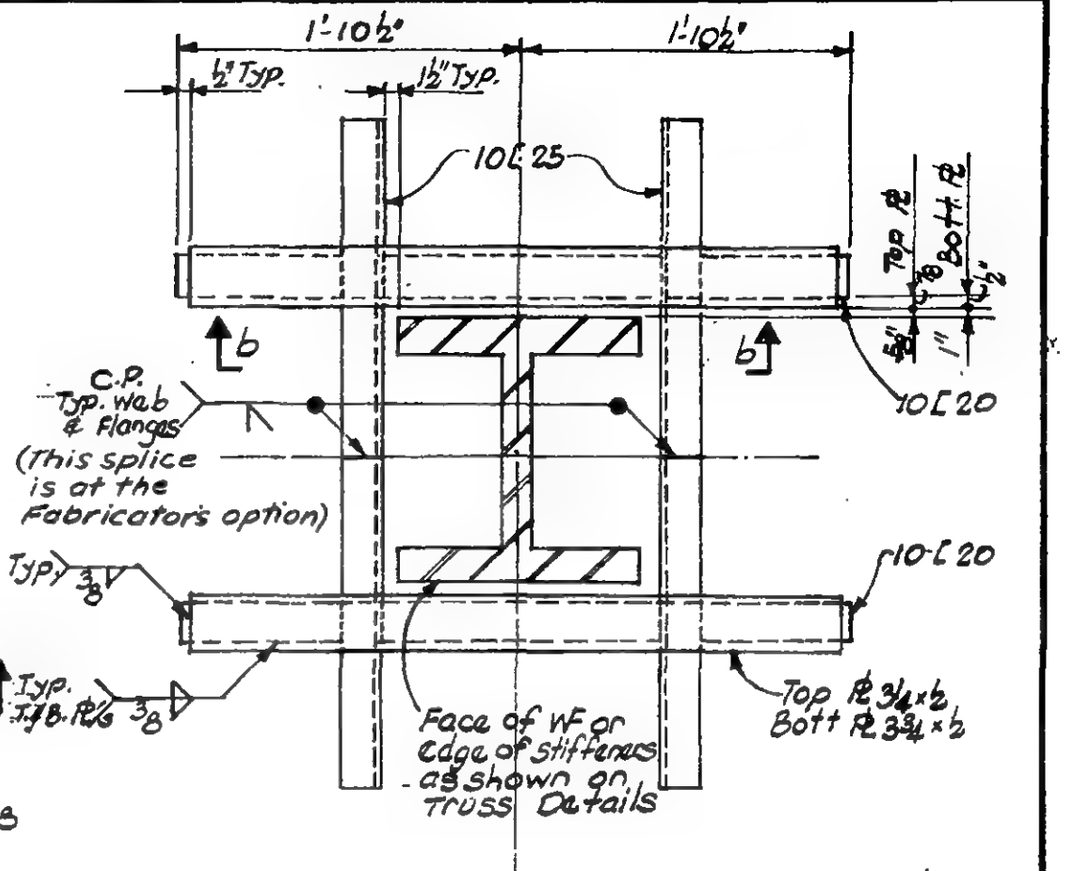

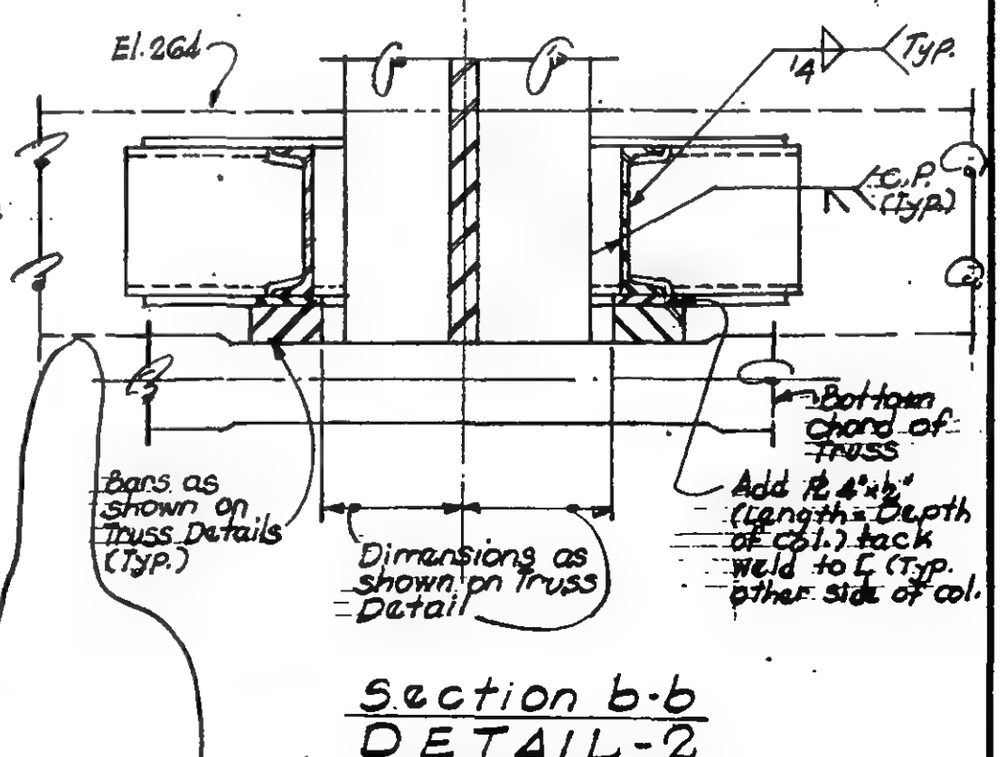

Section b-b
DETAIL-2
(All material Fy=50 ksi)

LICENSED PROFESSIONAL ENGINEER
LESLIE E. ROBERTSON
No. 34360
UNIVERSITY OF THE STATE OF NEW YORK

DRAWN S.C.
REVIEWED E.L.

10-JK4-9

SKILLING - HELLE - CHRISTIANSEN - ROBERTSON Structural & Civil Engineers

PROJECT THE WORLD TRADE CENTER | TITLE DETAIL OF COLUMN BOSOM PLS - TYPE A,B,C,D,E,F & G | DATE 11-24-67

REVISIONS

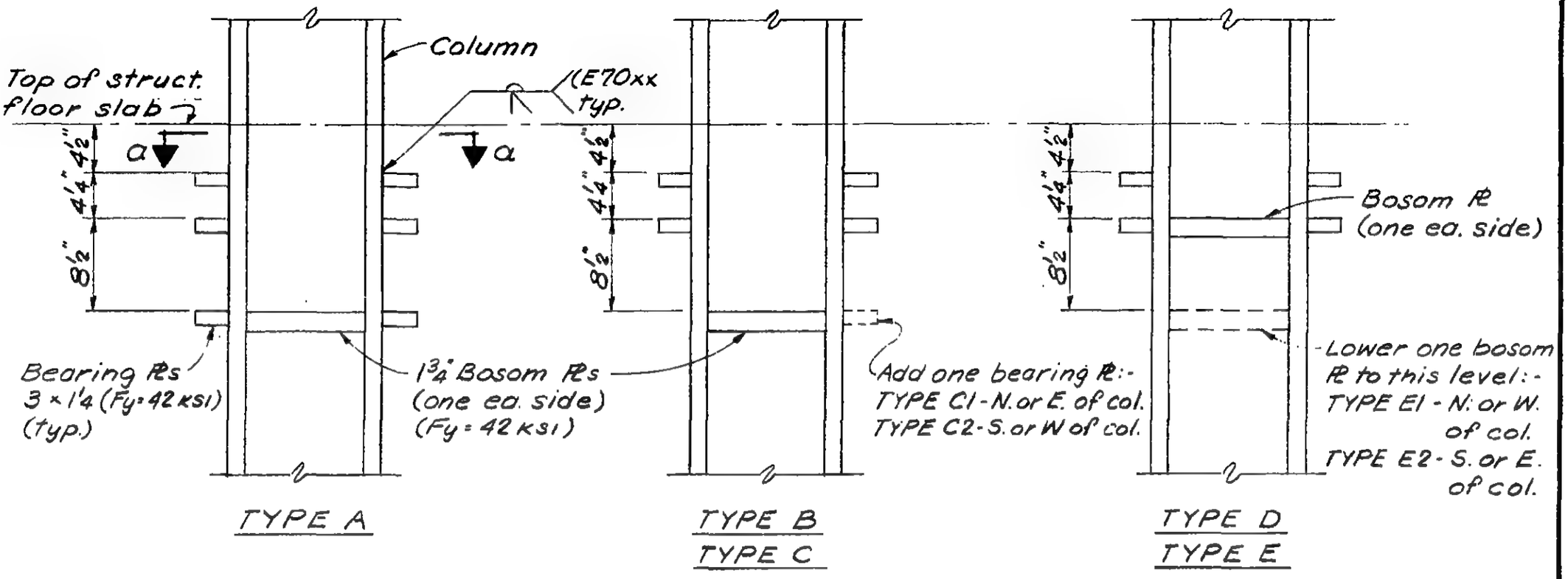

TYPE A

TYPE B
TYPE C

TYPE D
TYPE E

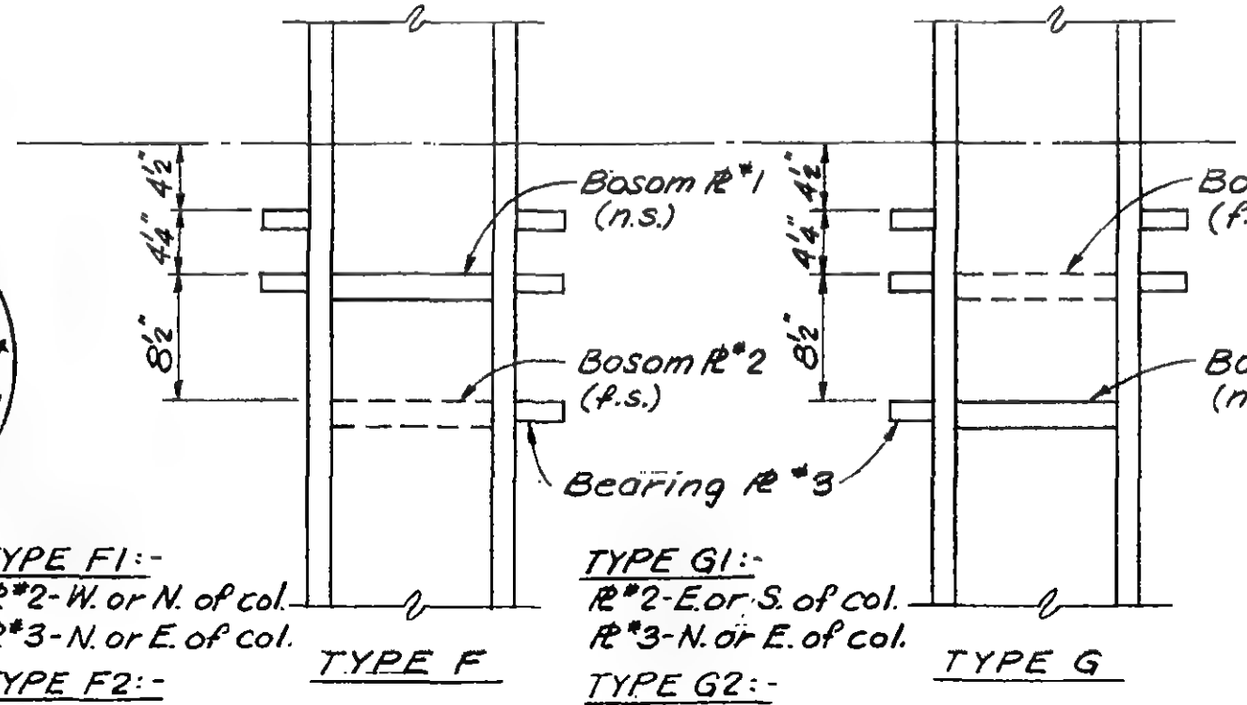

TYPE F1:-
PL #2 - W. or N. of col.
PL #3 - N. or E. of col.

TYPE F2:-
PL #2 - W. or N. of col.
PL #3 - S. or W. of col.

TYPE F

TYPE G1:-
PL #2 - E. or S. of col.
PL #3 - N. or E. of col.

TYPE G2:-
PL #2 - E. or S. of col.
PL #3 - S. or W. of col.

TYPE G

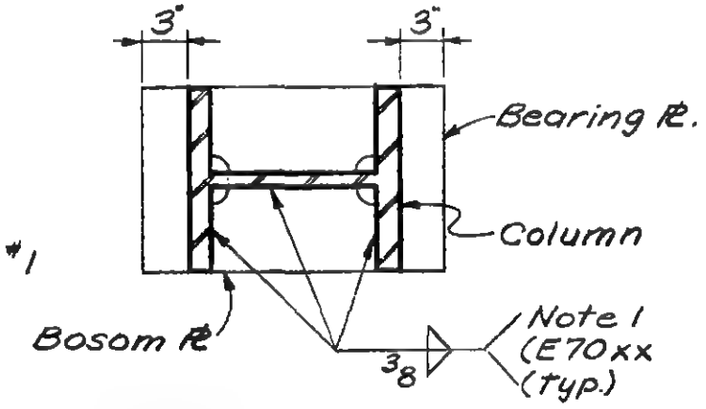

Section a-a

NOTES:

1. Use ½" weld on either column flanges or web when the thickness exceeds 2¼".
2. When a steel beam frames to the col., omit bearing PLs or bosom PL on the side the beam occurs.

LESLIE E. ROBERTSON LICENSED PROFESSIONAL ENGINEER No. 34360 UNIVERSITY OF THE STATE OF NEW YORK

10-JK4-10

SKILLING - HELLE - CHRISTIANSEN - ROBERTSON Structural & Civil Engineers

PROJECT THE WORLD TRADE CENTER | TITLE DETAIL OF COLUMN BOSOM PLs — TYPE H | DATE 2-9-68

REVISIONS

6-7-68

COLUMN No.	ELEVATION AT TOP OF PLATES																			
	NORTH					SOUTH					EAST					WEST				
	PL1	PL2	PL3	PL4	PL5	PL1	PL2	PL3	PL4	PL5	PL1	PL2	PL3	PL4	PL5	PL1	PL2	PL3	PL4	PL5
J5-1				292'-10½"					292'-10½"							293'-6"	292'-10½"			
				282'-10½"					282'-10½"							283'-6"	282'-10½"			
				272'-10½"					272'-10½"							273'-6"	272'-10½"			
J8-53				292'-10½"					292'-10½"							293'-6"	292'-10½"			
				282'-10½"					282'-10½"							283'-6"	282'-10½"			
				272'-10½"					272'-10½"							273'-6"	272'-10½"			
				251'-10½"					251'-10½"							252'-6"	251'-10½"			
J5-3				292'-10½"					292'-10½"		293'-6"	292'-10½"								
				282'-10½"					282'-10½"		283'-6"	282'-10½"								
				272'-10½"					272'-10½"		273'-6"	272'-10½"								
J8-54	293'-6"	292'-10½"				293'-6"	292'-10½"							292'-10½"						
	283'-6"	282'-10½"				283'-6"	282'-10½"							282'-10½"						
	273'-6"	272'-10½"				273'-6"	272'-10½"							272'-10½"						
	252'-6"	251'-10½"				252'-6"	251'-10½"							251'-10½"						
J4-16				248'-4"					248'-4"			248'-6"					248'-6"			
J5-14				248'-4"					248'-4"			248'-6"					248'-6"			
J5-17				248'-4"					248'-4"			248'-6"					248'-6"			
J6-13				248'-4"					248'-4"			248'-6"					248'-6"			

* See TYPE J for additional PLs when R.C. wall occurs.

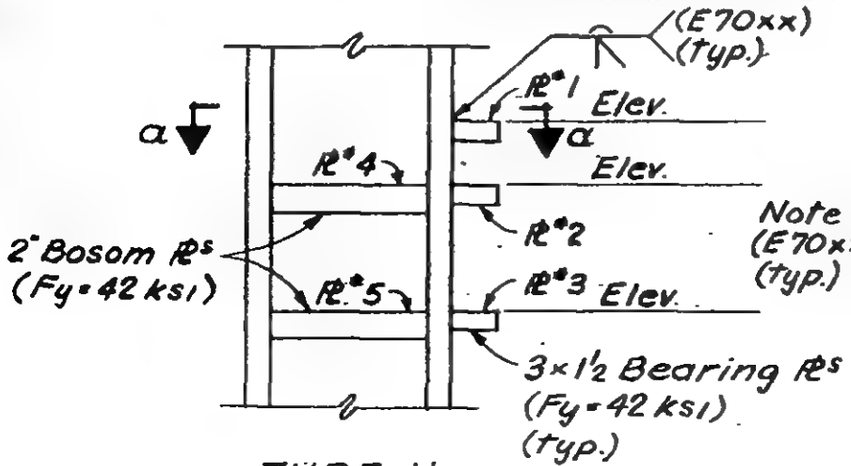

TYPE H

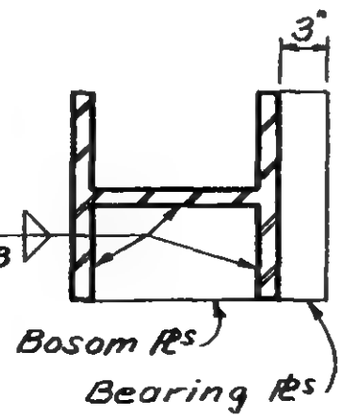

Section a-a

NOTE:-

1. Use ½" weld on either column flanges or web when the thickness exceeds 2¼".

LICENSED PROFESSIONAL ENGINEER
LESLIE E. ROBERTSON
No. 34360
UNIVERSITY OF THE STATE OF NEW YORK

10-JK4-10A

SKILLING - HELLE - CHRISTIANSEN - ROBERTSON Structural & Civil Engineers

PROJECT THE WORLD TRADE CENTER | TITLE DETAIL OF COLUMN BOSOM #s — TYPE H | DATE 11-24-67

REVISIONS
2-16-68
5-1-68
6-7-68
12-3-68
2-4-69

COLUMN No.	ELEVATION AT TOP OF PLATES																			
	NORTH					SOUTH					EAST					WEST				
	#1	#2	#3	#4	#5	#1	#2	#3	#4	#5	#1	#2	#3	#4	#5	#1	#2	#3	#4	#5
J11-7	283'-6"	282'-11"	282'-2½"			283'-6"	282'-11"	282'-2½"						282'-11"	282'-2½"					282'-2½"
J11-8 *																			281'-1"	280'-1"
J11-9					279'-3"					279'-3"						280'-3"	279'-9"	279'-3"		
J13-5	283'-6"	282'-11"	282'-2½"												282'-2½"					282'-2½"
J13-6 *																				282'-2½"
J14-7				278'-6"	277'-4"					277'-4"										
K27-3				251'-6½"																
K31-10						283'-6"	283'-1"	282'-6½"												
K31-11										280'-7"	281'-3"		277'-7½"							
K31-12					278'-4"					278'-3"	279'-0"		277'-7½"			279'-0"		277'-7½"		
K35-10	283'-6"	283'-1"	282'-6½"			283'-6"	283'-1"								282'-6½"					
K35-11					280'-7"				280'-7"	277'-8"	281'-1"		280'-1"			281'-1"		280'-1"		
K35-12					278'-3"					277'-1"	279'-0"		277'-9"			279'-0"		277'-9"		
K35-53	296'-0"	294'-0"	293'-1"			296'-0"	294'-0"	293'-1"						296'-0"	294'-0" 293'-1"					
K35-54			300'-0"					300'-0"							300'-0"					300'-0"
K35-55		295'-0"	293'-0"				295'-0"	293'-0"												
K37-1					292'-9"								292'-11"					292'-11"		
K37-4	296'-0"	294'-0"	293'-1"			296'-0"	294'-0"	293'-1"						296'-0"	294'-0" 293'-1"					
K37-5			300'-0"					300'-0"							300'-0"					300'-0"
K37-6		295'-0"	293'-0"				295'-0"	293'-0"												
K37-10	283'-6"	283'-1"	282'-6½"												282'-6½"					282'-6½"

* See TYPE J for additional #s when R.C. wall occurs.

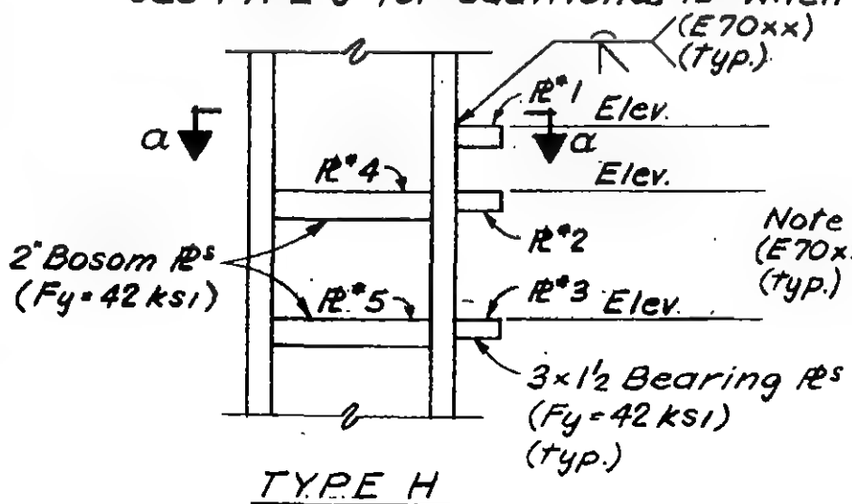

TYPE H

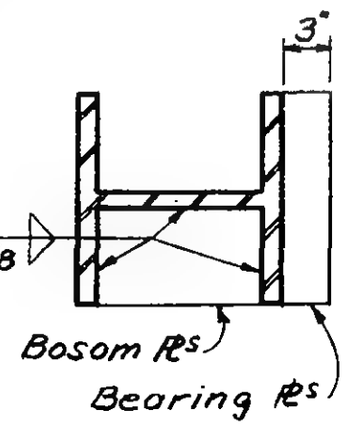

Section a-a

NOTE:-
1. Use ½" weld on either column flanges or web when the thickness exceeds 2¼".

LICENSED PROFESSIONAL ENGINEER LESLIE E. ROBERTSON No. 34360 UNIVERSITY OF THE STATE OF NEW YORK

DRAWN S.C.
REVIEWED E.L.

10-JK4-10B

SKILLING - HELLE - CHRISTIANSEN - ROBERTSON Structural & Civil Engineers

PROJECT THE WORLD TRADE CENTER | TITLE DETAIL OF COLUMN BOSOM PLS — TYPE H | DATE 9-20-68

REVISIONS
12-17-68
2-4-69
3-12-69

COLUMN No.	ELEVATION AT TOP OF PLATES																			
	NORTH					SOUTH					EAST					WEST				
	PL*1	PL*2	PL*3	PL*4	PL*5	PL*1	PL*2	PL*3	PL*4	PL*5	PL*1	PL*2	PL*3	PL*4	PL*5	PL*1	PL*2	PL*3	PL*4	PL*5
K38-2				278'-1"	277'-1"				278'-4"				278'-3½"					278'-3½"		
K40-1										248'-4"			248'-7½"							
K40-2					248'-4"					248'-4"			248'-7½"					248'-7½"		
K41-2					282'-9"					282'-9"			282'-11"							
K41-6		297'-0"	295'-0"				297'-0"	295'-0"												
K43-1		283'-3¼"	282'-7"				283'-3¼"	282'-7"												282'-6¾"
K43-2					282'-9"					282'-9"			282'-11"							
K43-52		283'-3¼" 273'-3¼"	282'-7" 272'-7"												282'-6¾" 272'-6¾"					282'-6¾" 272'-6¾"
K43-53	283'-6" 273'-6"	282'-10½" 272'-10½"													282'-10½" 272'-10½"					282'-10½" 272'-10½"
K44-3					272'-7"								272'-11"					272'-11"		
K45-1						283'-6" 273'-6"	282'-10½" 272'-10½"								282'-10½" 272'-10½"					282'-10½" 272'-10½"
K45-4	276'-0"	274'-9½"				276'-0"	274'-9½"								274'-8"					274'-8"
K45-5	278'-11¼"	277'-8¾"				278'-11¼"	277'-8¾"								277'-7¼"					277'-7¼"
K45-6	281'-9"	280'-6½"				281'-9"	280'-6½"								280'-5"					280'-5"
K47-51							283'-3¼" 273'-3¼"	282'-7" 272'-7"							282'-6¾" 272'-6¾"					282'-6¾" 272'-6¾"

* See TYPE J for additional PLs when R.C. wall occurs.

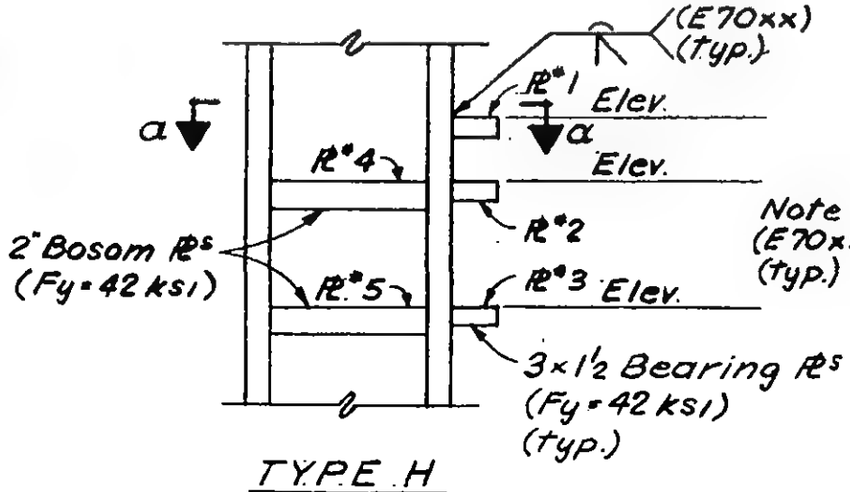

TYPE H

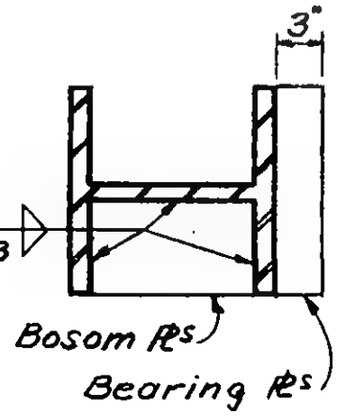

Section a-a

NOTE:-

1. Use ½" weld on either column flanges or web when the thickness exceeds 2¼".

LICENSED PROFESSIONAL ENGINEER
LESLIE E. ROBERTSON
No. 34360
UNIVERSITY OF THE STATE OF NEW YORK

DRAWN S.C.
REVIEWED E.L.

10-JK4-10C

SKILLING - HELLE - CHRISTIANSEN - ROBERTSON Structural & Civil Engineers

PROJECT THE WORLD TRADE CENTER | TITLE DETAIL OF COLUMN BOSOM #s — TYPE H | DATE 3-12-69

REVISIONS

COLUMN No.	ELEVATION AT TOP OF PLATES																			
	NORTH					SOUTH					EAST					WEST				
	#1	#2	#3	#4	#5	#1	#2	#3	#4	#5	#1	#2	#3	#4	#5	#1	#2	#3	#4	#5
K51-55	327'-6" Int. #s @4'-0" o.c. 283'-6"					327'-6" Int. #s @4'-0" o.c. 283'-6"														
K53-54	327'-6" Int. #s @4'-0" o.c. 283'-6"					327'-6" Int. #s @4'-0" o.c. 283'-6"														
K53-55	327'-6" Int. #s @4'-0" o.c. 283'-6"					327'-6" Int. #s @4'-0" o.c. 283'-6"														
K53-56						327'-6" Int. #s @4'-0" o.c. 283'-6"														
K53-57	327'-6" Int. #s @4'-0" o.c. 283'-6"					327'-6" Int. #s @4'-0" o.c. 283'-6"														

* See TYPE J for additional #s when R.C. wall occurs.

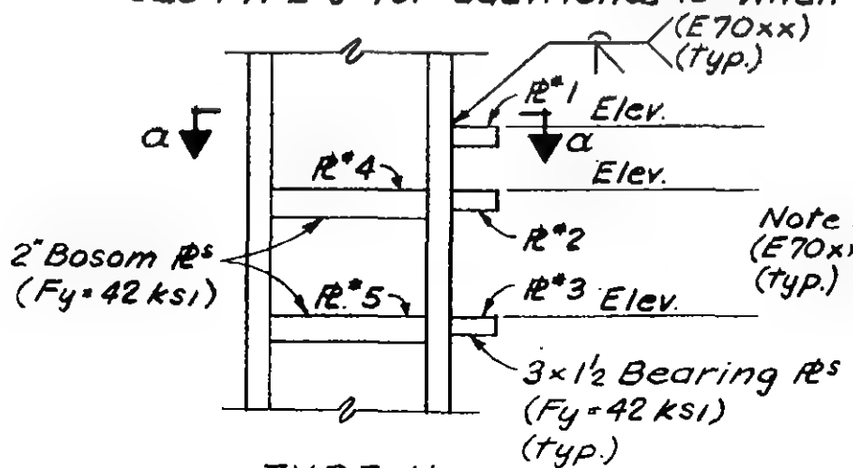

TYPE H

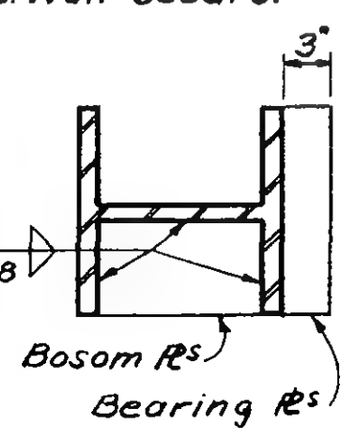

Section a-a

NOTE:-

1. Use ½" weld on either column flanges or web when the thickness exceeds 2¼".

LICENSED PROFESSIONAL ENGINEER LESLIE E. ROBERTSON No. 34360 UNIVERSITY OF THE STATE OF NEW YORK

DRAWN S.C.
REVIEWED E.L.

10-JK4-10D

SKILLING - HELLE - CHRISTIANSEN - ROBERTSON Structural & Civil Engineers

PROJECT THE WORLD TRADE CENTER | TITLE DETAIL OF COLUMN BOSOM PLS — TYPE H | DATE 5-1-68

REVISIONS

6-7-68

COLUMN No.	ELEVATION AT TOP OF PLATES																			
	NORTH					SOUTH					EAST					WEST				
	*1	*2	*3	*4	*5	*1	*2	*3	*4	*5	*1	*2	*3	*4	*5	*1	*2	*3	*4	*5
K70-4				278'-4"	277'-6"				278'-0"	276'-9"								277'-10"		
K70-5				278'-0"	276'-9"				278'-0"	276'-9"								277'-1"		
K70-6				278'-0"	276'-9"					278'-4"			278'-7½"					278'-7½"		
K70-7					278'-4"					278'-4"	278'-0"		277'-2½"							
K71-12					278'-4"					276'-11"						278'-0"		277'-2½"		
K71-13					276'-11"					278'-4"			278'-7½"					278'-7½"		

* See TYPE J for additional PLs when R.C. wall occurs.

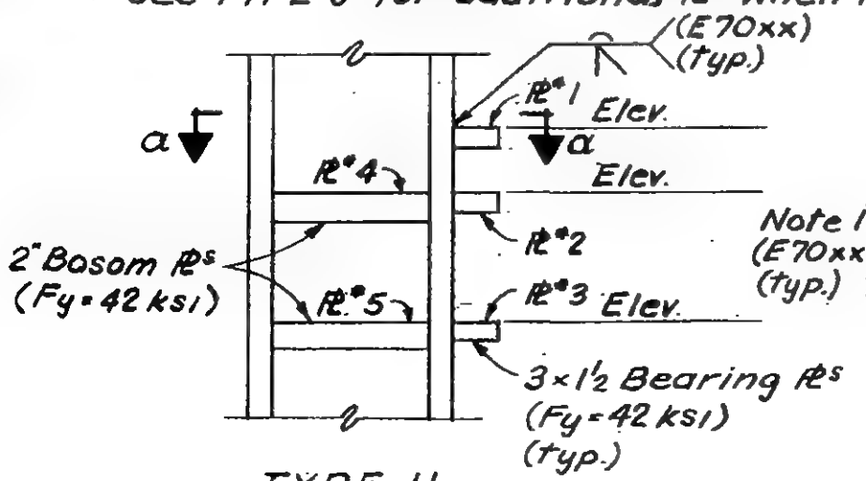

TYPE H

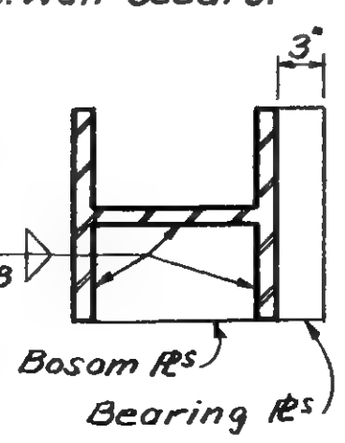

Section a-a

NOTE:-

1. Use ½" weld on either column flanges or web when the thickness exceeds 2¼".

LICENSED PROFESSIONAL ENGINEER LESLIE E. ROBERTSON No. 34360 STATE OF NEW YORK

10-JK4-10E

SKILLING - HELLE - CHRISTIANSEN - ROBERTSON Structural & Civil Engineers

PROJECT THE WORLD TRADE CENTER | TITLE DETAIL OF COLUMN BOSOM Rs — TYPE H | DATE 6-7-68

REVISIONS

9-4-68

COLUMN No.	ELEVATION AT TOP OF PLATES																			
	NORTH					SOUTH					EAST					WEST				
	#1	#2	#3	#4	#5	#1	#2	#3	#4	#5	#1	#2	#3	#4	#5	#1	#2	#3	#4	#5
J72-1			248'-6"					248'-6"							248'-4"					248'-4"
J72-2			248'-6"					248'-6"							248'-4"					248'-4"
J.72-4					248'-4"					248'-4"			248'-6"					248'-6"		
J72-6			248'-6"					248'-6"					248'-6"					248'-6"		
J72-7			↕					↕							248'-4"					248'-4"
J72-8															↕					↕
J72-9																				
J72-10																				
J72-11																				
J72-12			↕					↕							↕					↕
K72-13			248'-6"					248'-6"							248'-4"					248'-4"
K72-15					248'-4"					248'-4"			248'-6"					248'-6"		
K72-16					↕					↕			↕					↕		
K72-17					↕					↕			↕					↕		
K72-18					248'-4"					248'-4"			248'-6"					248'-6"		

* See TYPE J for additional Rs when R.C. wall occurs.

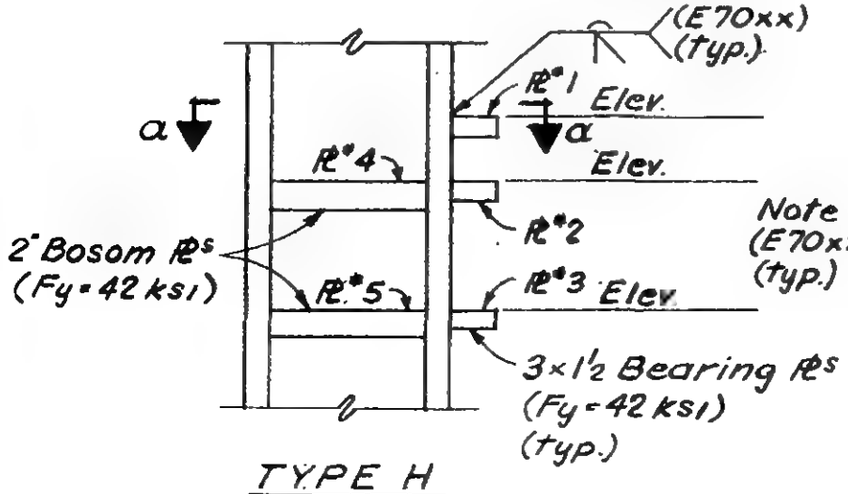

TYPE H

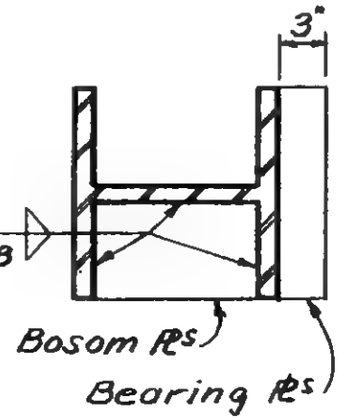

Section a-a

NOTE:-

1. Use ½" weld on either column flanges or web when the thickness exceeds 2¼".

LICENSED PROFESSIONAL ENGINEER
LESLIE E. ROBERTSON
No. 34360
UNIVERSITY OF THE STATE OF NEW YORK

10-JK4-10F

SKILLING - HELLE - CHRISTIANSEN - ROBERTSON Structural & Civil Engineers

PROJECT THE WORLD TRADE CENTER | TITLE DETAIL OF COLUMN BOSOM Rs — TYPE H | DATE 6-7-68

REVISIONS
9-4-68
3-30-70

COLUMN No.	ELEVATION AT TOP OF PLATES																			
	NORTH					SOUTH					EAST					WEST				
	#1	#2	#3	#4	#5	#1	#2	#3	#4	#5	#1	#2	#3	#4	#5	#1	#2	#3	#4	#5
J74-1					248'-4"					248'-4"			248'-6"					248'-6"		
J74-2					248'-4"					248'-4"			248'-6"					248'-6"		
J74-3					248'-4"					248'-4"			248'-6"					248'-6"		
J74-5			248'-6"					248'-6"					248'-6"					248'-6"		
J74-6			248'-6" 278'-4"		284'-6"			248'-6" 278'-4"			284'-6"				248'-4" 278'-4"					248'-4" 278'-4"
J74-7			248'-6"					248'-6"							248'-4"					248'-4"
J74-8			↕					↕							↕					↕
J74-9			↕					↕							↕					↕
J74-10			↕					↕							↕					↕
J74-11			↕					↕							↕					↕
K74-12			248'-6"					248'-6"							248'-4"					248'-4"
K74-13			278'-4"					278'-4"												
K74-14			248'-6"					248'-6"							248'-4"					248'-4"
K74-15			↕					↕							↕					↕
K74-16			↕					↕							↕					↕
K74-17			248'-6"					248'-6"							248'-4"					248'-4"
K74-18					248'-4"					248'-4"			248'-6"					248'-6"		
K74-19					248'-4"					248'-4"			248'-6"					248'-6"		

* See TYPE J for additional Rs when R.C. wall occurs.

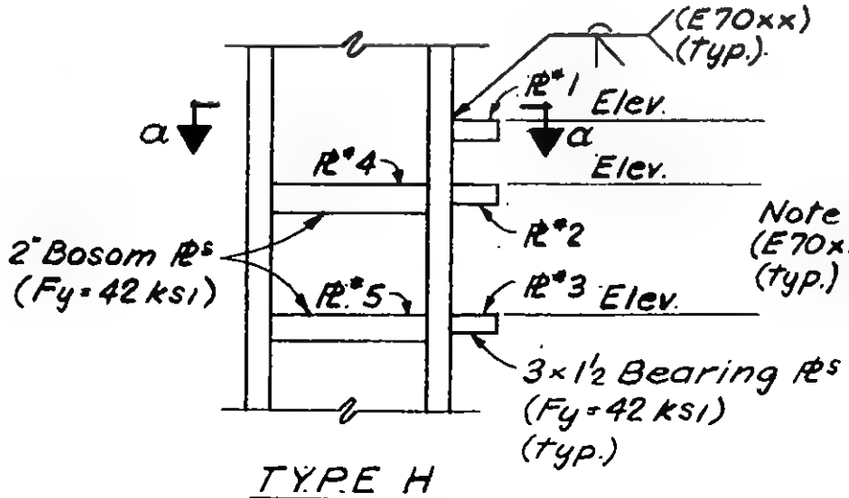

TYPE H

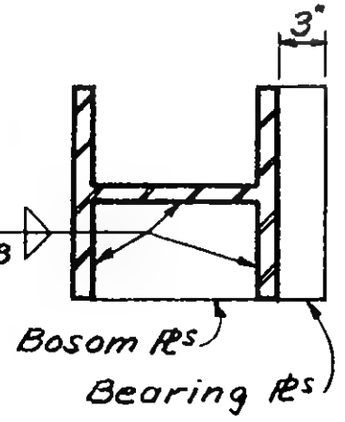

Section a-a

NOTE:-

1. Use ½" weld on either column flanges or web when the thickness exceeds 2¼".

LICENSED PROFESSIONAL ENGINEER
LESLIE E. ROBERTSON
No. 34360
UNIVERSITY OF THE STATE OF NEW YORK

DRAWN
S.C.
REVIEWED
E.L.

10-JK4-10G

SKILLING - HELLE - CHRISTIANSEN - ROBERTSON Structural & Civil Engineers

PROJECT THE WORLD TRADE CENTER | TITLE DETAIL OF COLUMN BOSOM PLS — TYPE H | DATE 4-18-69

REVISIONS

COLUMN No.	ELEVATION AT TOP OF PLATES																			
	NORTH					SOUTH					EAST					WEST				
	#1	#2	#3	#4	#5	#1	#2	#3	#4	#5	#1	#2	#3	#4	#5	#1	#2	#3	#4	#5
K92-3			282'-2½" 268'-2½"					282'-2½" 268'-2½"							282'-0" 268'-0"					282'-0" 268'-0"
K92-4			282'-2½"					282'-2½"							282'-0"					282'-0"
K92-5			282'-2½" 268'-2½"					282'-2½" 268'-2½"							282'-0" 268'-0"					282'-0" 268'-0"

* See TYPE J for additional PLS when R.C. wall occurs.

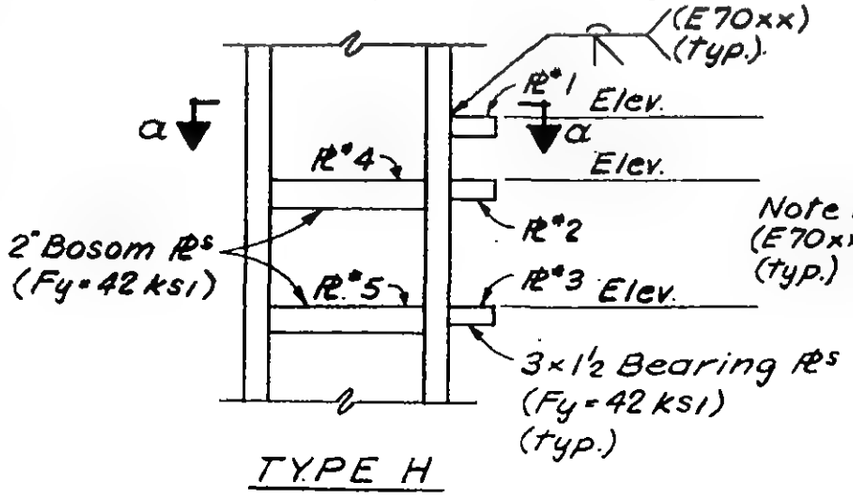

TYPE H

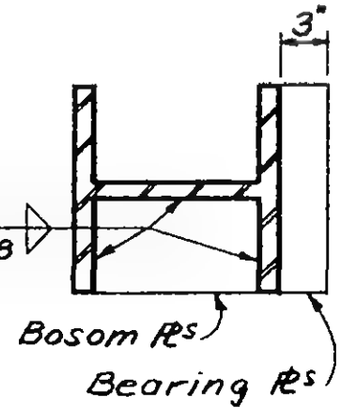

Section a-a

NOTE:-

1. Use ½" weld on either column flanges or web when the thickness exceeds 2¼".

LICENSED PROFESSIONAL ENGINEER LESLIE E. ROBERTS JR. No. 34360 UNIVERSITY OF THE STATE OF NEW YORK

DRAWN S.C.

REVIEWED E.L.

10-JK4-10H

SKILLING - HELLE - CHRISTIANSEN - ROBERTSON Structural & Civil Engineers

PROJECT THE WORLD TRADE CENTER | TITLE DETAIL OF COLUMN BOSOM PLS — TYPE J | DATE 2-9-68

REVISIONS

5-1-68

COLUMN No.	ELEVATION OF PLATES							
	NORTH		SOUTH		EAST		WEST	
	TOP PL	BOTT. PL	TOP PL	BOTT. PL	TOP PL	BOTT. PL	TOP PL	BOTT. PL
J2-16	283'-8"	273'-1"	283'-8"	273'-1"				
J2-17					300'-0"	273'-1"	300'-0"	273'-1"
J3-13					293'-6"	282'-3"		
J3-57					293'-6"	282'-3"		
J4-13					293'-6"	282'-3"		
J5-7							304'-6"	290'-0"
J5-14					*293'-6"	*282'-3"		
J6-12					293'-6"	282'-3"		
J7-13					293'-6"	289'-6"		
J8-10					*293'-6"	*282'-3"		
J8-10					273'-2"	269'-0"		

* No intermediate PLs Req'd.

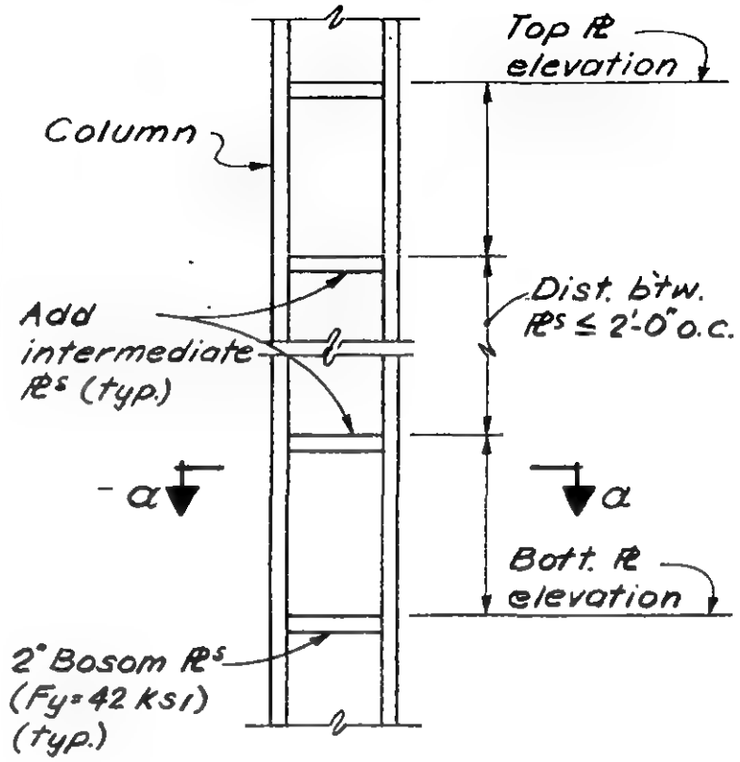

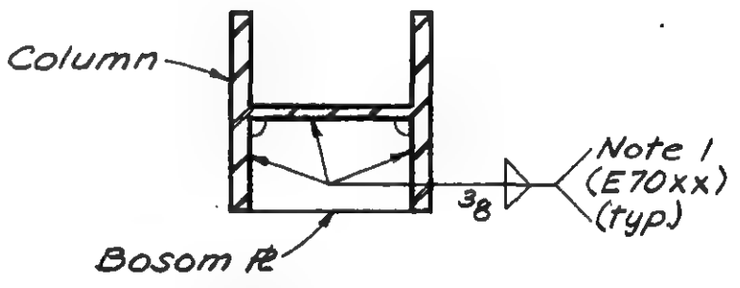

Section a-a

NOTE:-

1. Use 1/2" weld on either column flanges or web when the thickness exceeds 2 1/4".

LICENSED PROFESSIONAL ENGINEER LESLIE E. ROBERTSON No. 34360 UNIVERSITY OF THE STATE OF NEW YORK

10 - JK4 - 11A

SKILLING - HELLE - CHRISTIANSEN - ROBERTSON Structural & Civil Engineers

PROJECT THE WORLD TRADE CENTER | TITLE DETAIL OF COLUMN BOSOM ℄s — TYPE J | DATE 11-24-67

REVISIONS

6-7-68

COLUMN No.	ELEVATION OF PLATES							
	NORTH		SOUTH		EAST		WEST	
	TOP ℄	BOTT. ℄	TOP ℄	BOTT. ℄	TOP ℄	BOTT. ℄	TOP ℄	BOTT. ℄
J9-8					293'-6"	291'-6"		
J11-8					281'-1"	273'-2"		
J13-6					283'-2½"	273'-2"		
J14-1			301'-8"	292'-6¾"				
J14-3							303'-10"	295'-6"

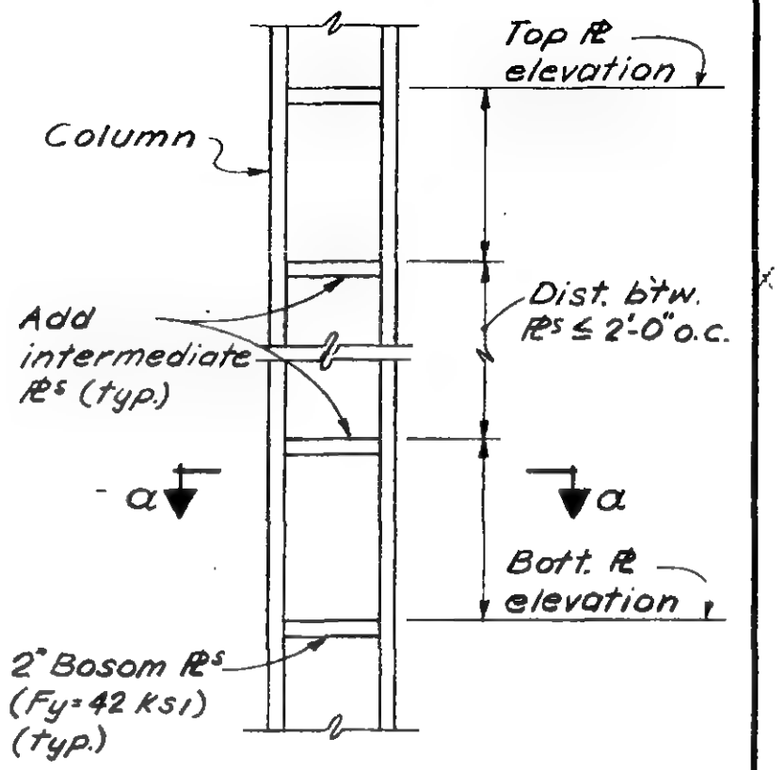

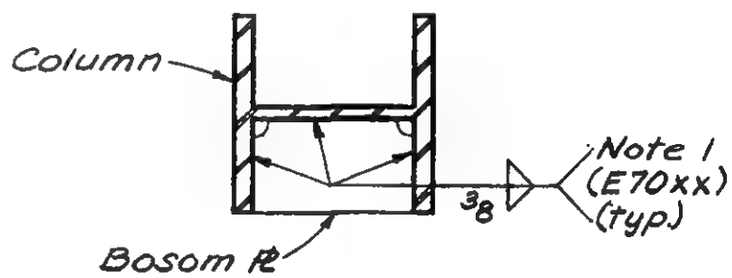

Section a-a

NOTE:-

1. Use ½" weld on either column flanges or web when the thickness exceeds 2¼".

LICENSED PROFESSIONAL ENGINEER LESLIE E. ROBERTSON No. 34360 STATE OF NEW YORK

10-JK4-12

SKILLING - HELLE - CHRISTIANSEN - ROBERTSON Structural & Civil Engineers

PROJECT THE WORLD TRADE CENTER | TITLE DETAIL OF COLUMN BOSOM PLS — TYPE J | DATE 6-7-68

REVISIONS
9-20-68
2-4-69

COLUMN No.	ELEVATION OF PLATES							
	NORTH		SOUTH		EAST		WEST	
	TOP PL	BOTT. PL	TOP PL	BOTT. PL	TOP PL	BOTT. PL	TOP PL	BOTT. PL
K29-4	282'-4"	268'-8"	282'-4"	268'-8"				
K31-11	282'-4"	278'-4"						
K31-12	293'-5"	289'-5"	293'-5"	289'-5"				
K35-53							304'-0"	293'-1"
K35-55					297'-0"	293'-0"	297'-0"	293'-0"
K37-4							304'-0"	293'-1"
K37-6					297'-0"	293'-0"	297'-0"	293'-0"
K38-1	283'-0"	277'-8"	283'-0"	277'-8"				
K40-1	293'-0"	278'-4"	293'-0"	278'-4"				
K41-6					297'-0"	295'-0"	297'-0"	295'-0"

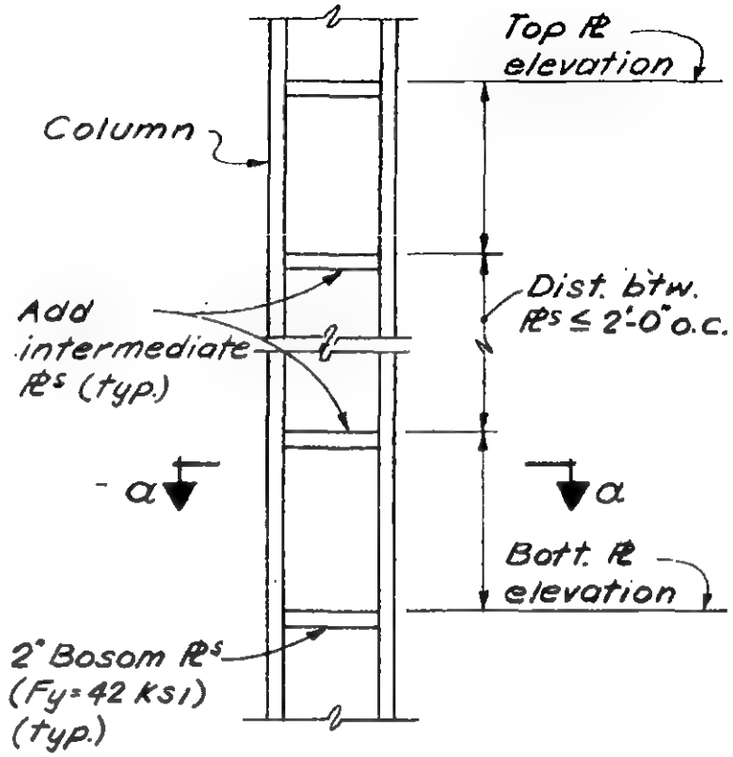

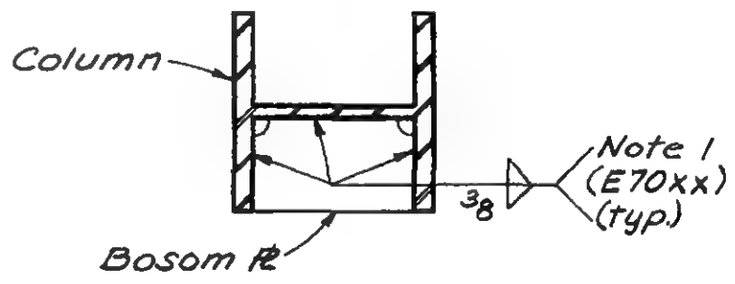

Section a-a

NOTE:-
1. Use 1/2" weld on either column flanges or web when the thickness exceeds 2 1/4".

LICENSED PROFESSIONAL ENGINEER
LESLIE E. ROBERTSON
No. 34310
UNIVERSITY OF THE STATE OF NEW YORK

DRAWN S.C.
REVIEWED E.L.

10-JK4-15

SKILLING - HELLE - CHRISTIANSEN - ROBERTSON Structural & Civil Engineers

PROJECT THE WORLD TRADE CENTER | TITLE DETAIL OF COLUMN BOSOM ℄s — TYPE J | DATE 3-12-69

REVISIONS

COLUMN No.	ELEVATION OF PLATES							
	NORTH		SOUTH		EAST		WEST	
	TOP ℄	BOTT. ℄	TOP ℄	BOTT. ℄	TOP ℄	BOTT. ℄	TOP ℄	BOTT. ℄
K47-53					331'-0"	293'-0"	331'-0"	293'-0"
K47-54	331'-0"	293'-0"	331'-0"	293'-0"				
K49-4					292'-9"	289'-0"	292'-9"	289'-0"
K49-54					331'-0"	293'-0"	331'-0"	293'-0"
K49-55	331'-0"	293'-0"	331'-0"	293'-0"				
K51-55					331'-0"	283'-0"	331'-0"	283'-0"
K53-54					331'-0"	283'-0"	331'-0"	283'-0"
K53-55					↕	↕	↕	↕
K53-56								
K53-57					331'-0"	283'-0"	331'-0"	283'-0"

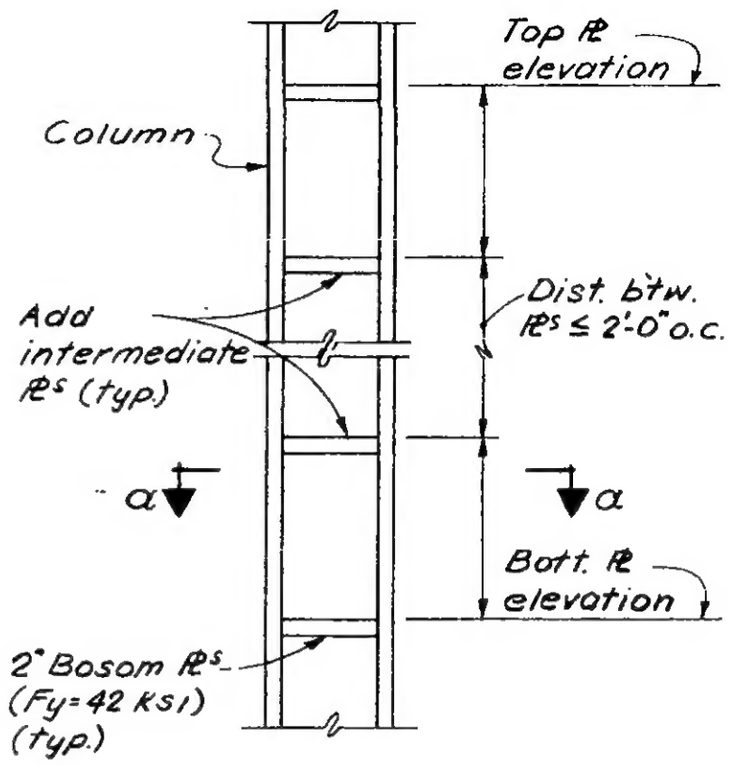

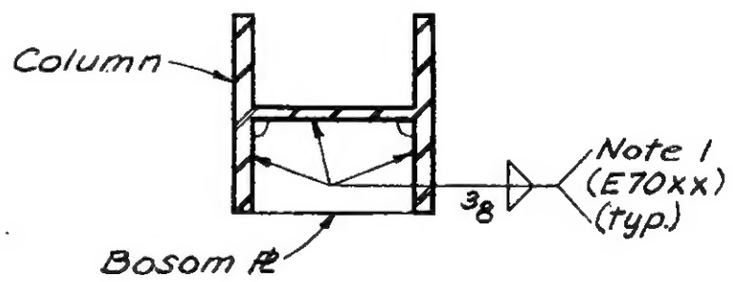

Section a-a

NOTE:-

1. Use ½" weld on either column flanges or web when the thickness exceeds 2¼".
2. Where beam occurs, the interrupted ℄ may be omitted.

LICENSED PROFESSIONAL ENGINEER LESLIE E. ROBERTSON No. 34360 UNIVERSITY OF THE STATE OF NEW YORK

DRAWN S.C.

REVIEWED E.L.

10-JK4-16

SKILLING - HELLE - CHRISTIANSEN - ROBERTSON Structural & Civil Engineers

PROJECT THE WORLD TRADE CENTER | TITLE DETAIL OF COLUMN BOSOM PLS — TYPE J | DATE 6-11-68

REVISIONS

COLUMN No.	ELEVATION OF PLATES							
	NORTH		SOUTH		EAST		WEST	
	TOP PL	BOTT. PL	TOP PL	BOTT. PL	TOP PL	BOTT. PL	TOP PL	BOTT. PL
K62-6					302'0"	296'-0"		

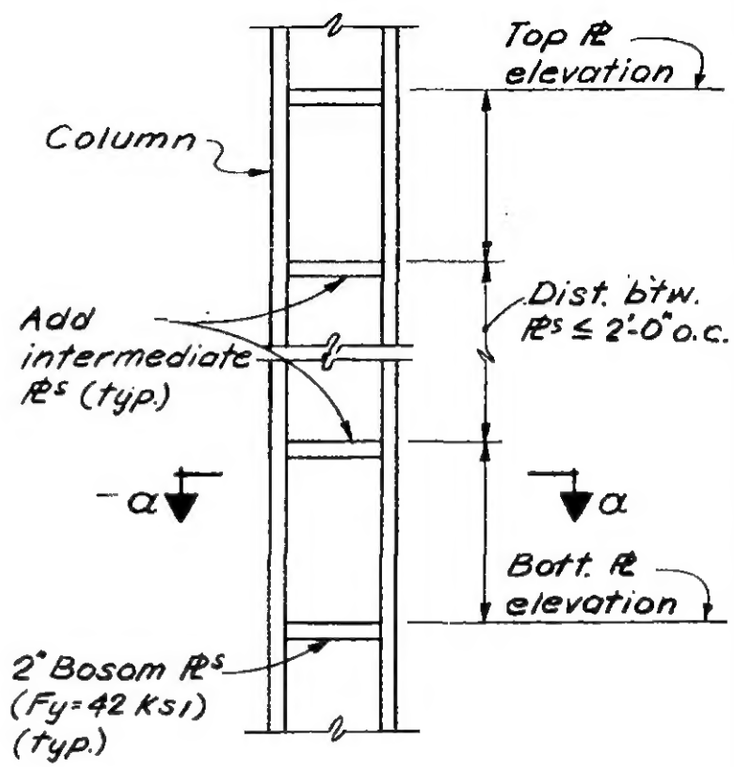

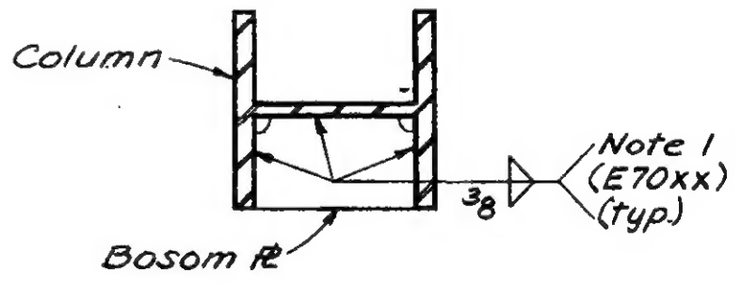

Section a-a

NOTE:-

1. Use 1/2" weld on either column flanges or web when the thickness exceeds 2 1/4".

LICENSED PROFESSIONAL ENGINEER
LESLIE E. ROBERTSON
No. 34360
UNIVERSITY OF THE STATE OF NEW YORK

10-JK4-29

SKILLING - HELLE - CHRISTIANSEN - ROBERTSON Structural & Civil Engineers

PROJECT THE WORLD TRADE CENTER | TITLE DETAIL OF COLUMN BOSOM PLS — TYPE J | DATE 5-1-68

REVISIONS
6-7-68
12-17-68

COLUMN No.	ELEVATION OF PLATES							
	NORTH		SOUTH		EAST		WEST	
	TOP PL	BOTT. PL	TOP PL	BOTT. PL	TOP PL	BOTT. PL	TOP PL	BOTT. PL
J72-4	279'-0"	273'-1"						
J73-4	*276'-0"	*273'-1"						
K75-23	282'-0"	273'-3"						

* No Intermediate PL's are reqd.

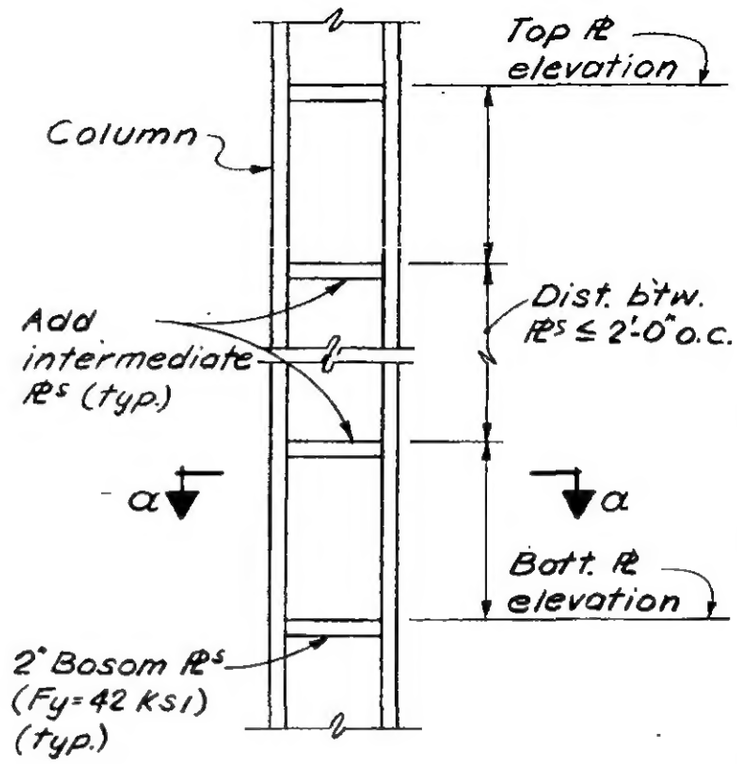

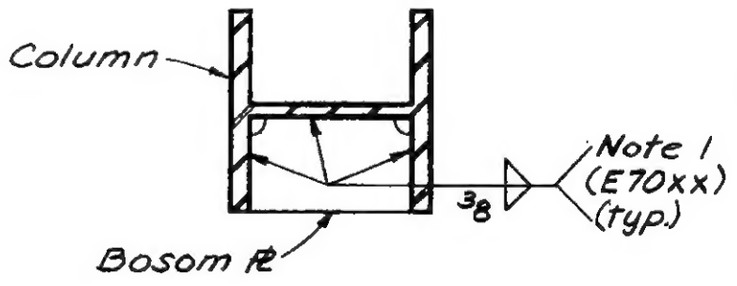

Section a-a

NOTE:-
1. Use 1/2" weld on either column flanges or web when the thickness exceeds 2 1/4".

LICENSED PROFESSIONAL ENGINEER
LESLIE E. ROBERTSON
No. 34360
THE STATE OF NEW YORK

10-JK4-30

SKILLING, HELLE, CHRISTIANSEN, ROBERTSON — Structural & Civil Engineers

PROJECT: THE WORLD TRADE CENTER | TITLE: DETAIL FOR NEW COLUMNS IN HOTEL AREA | DATE: 12-23-71

REVISIONS

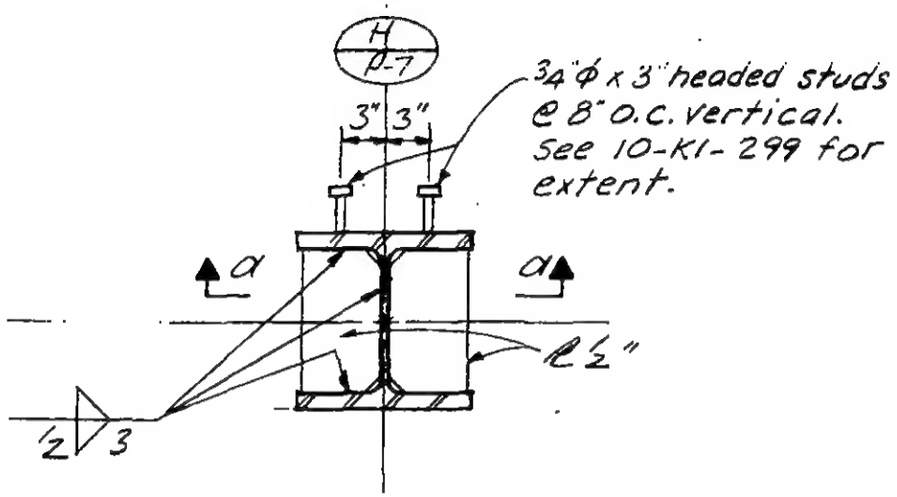

Section A-A

NORTH

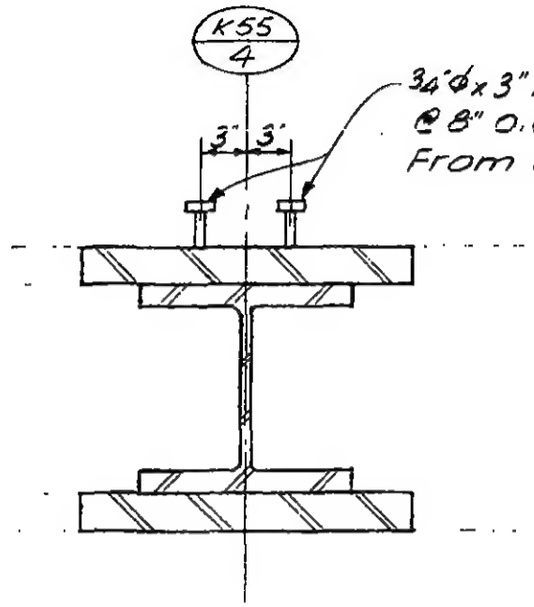

Detail B

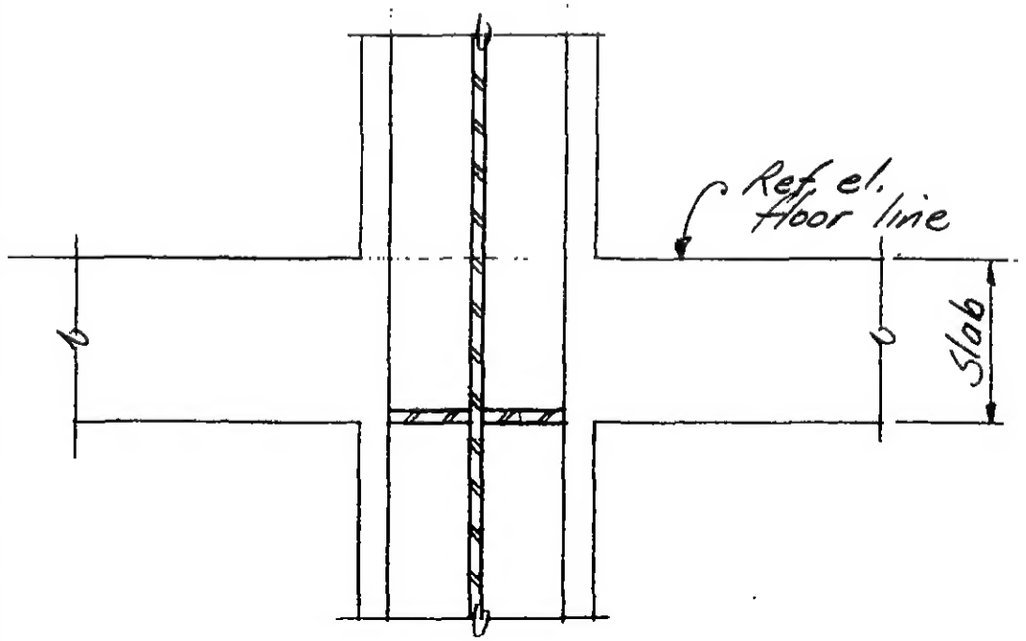

Section a-a

LICENSED PROFESSIONAL ENGINEER
LESLIE E. ROBERTSON
No. 34360
UNIVERSITY OF THE STATE OF NEW YORK

DESIGNED K. Chiang
DRAWN
REVIEWED W Brewer

10-JK5-2